# GT 300 A/II

## Oil-Gas Fired Hot Water boiler

English
03/14/08

**Please Read & Save these instructions for Future Reference**

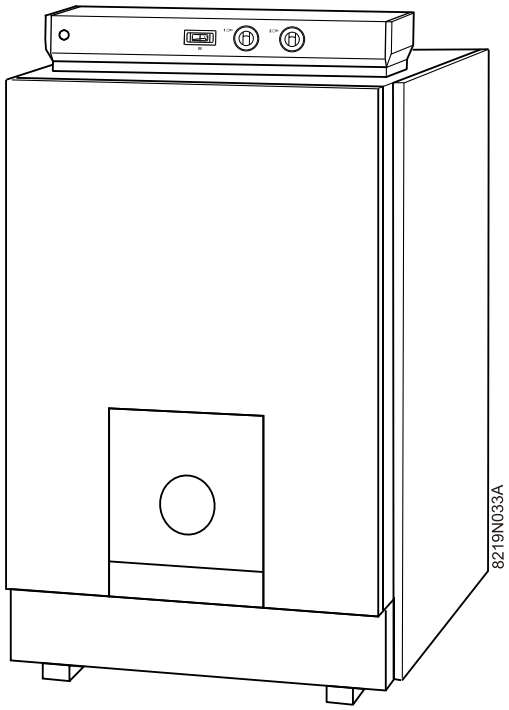


# Installation and operating instructions

**Warning:**
**Before putting the boiler into operation read this manual carefully.**

**Warning:**
**The operating manual is part of the documentation that is delivered to the installation's operator. Go through the information in this manual with the owner/operator and make sure that he or she is familiar with all the necessary operating instructions.**

**Notice:**
This manual must be retained for future reference. Improper installation, adjustment, alteration, service or maintenance can cause injury, loss of life or property damage. Refer to this manual. For assistance or additional information consult a qualified installer, service agency or the gas supplier.

De Dietrich

85534150 E 94863873

## Guideline of Notices

**Warning:**
**indicates presence of hazards that can cause, if not avoided, severe personal injury, death or substantial property damage.**

**Caution:**
indicates presence of hazards that will or can cause, if not avoided, minor personal injury or property damage.

Notice:
Application comment for optimum use of equipment and adjustment as well as useful information.

Reference to an other instruction book.

## Observe the following symbols

**DANGER**
**due to explosion of gas.**

- Work only on gas components when you have a license to do so.
- Note that the assembly of gas and vent connections, the initial start-up, the electrical connections, the maintenance and service can only be performed by a licensed service contractor or technician.

**DANGER**
**due to electricity.**

- Prior to doing any work on the heating system, disconnect all electrical power to the boiler at the emergency switch.
- It is NOT sufficient to shut off only the boiler control!

**CAUTION!**
**SYSTEM DAMAGE**
**due to improper installation.**

- Observe local and state codes as well as common industry practices during the installation and operation of the heating appliance.

**CAUTION!**
**SYSTEM DAMAGE**
**due to inadequate cleaning and maintenance.**

- A boiler cleaning and maintenance should be performed annually. Verify complete system operation at the same time.
- Correct the problem immediately to prevent damage to the system!

## Safety Considerations

Please observe the following safety instructions.

Read this manual carefully.

Correct installation and adjustment of the burner and the control panel is a precondition for safe, efficient operation of the gas boiler.

Read this manual and the specifications on the safety label carefully before attempting to put the burner into operation.

**Do not store or use gasoline or other flammable liquids in the vicinity of this or any other appliance.**
**Installation and service must be peformed by a qualified installer, service agency or the gas supplier.**

**WHAT TO DO IF YOU SMELL GAS:**
**- Do not try to light any appliance.**
**- Do not touch any electric switch, do not use any phone in your building.**
**- Immediately call your gas supplier from a neighbor's phone. Follow the gas supplier's instructions.**
**- If you cannot reach your gas supplier, call the Fire Department.**

**Warning:**
**Improper installation, adjustment, and/or operation could cause carbon monoxide poisoning resulting in injury or death.**
**This product must be installed and serviced by a professional service technician who is experienced and qualified in hot water boiler installation and gas combustion.**

**Caution:** Strict compliance with these instructions is a precondition for the correct operation of the boiler.

**IMPORTANT**
Service on this boiler should be undertaken only by trained and skilled personnel.
Keep boiler area clear and free from combustible materials, gasoline and other flammable vapors and liquids.
Do not place any obstruction in the boiler room that will hinder the flow of combustion and ventilating air.
Read these instructions carefully before proceeding with the installation of boiler. Post instructions near boiler for reference by owner and serviceman.
Maintain instructions in legible condition.

"All installations of this appliance must be be in accordance to all national and local codes and authorities having jurisdiction"

[Canadian Installation] CSA B139 for Oil & CSA B149 for Gas
[USA Installations] NFPA 54/ANSI Z223.1 for Gas & NFPA 31 for Oil

This boiler must be connected to a venting that will safely and effectively discharge all flue gases to the outside in an effective manner.

Never burner garbage or paper in the unit, and never leave combustible materials around it.

Do not use gasoline, crankcase draining, or any other oil containing gasoline

# Contents

# Regulations and guidelines

The installation and operating instructions shown here are given as a guide for installation and operation and are not meant to replace any State or Local Codes that may apply to the individual installation. Good engineering practice should be used. Any deviation from laws or regulations or industry Code or these instructions will void the boiler warranty and any other responsability or liability of the De Dietrich Thermiques S.A.

Only a qualified and licenced heating professional is to carry out the removal, installation, startup and maintenance of this boiler. The boiler must be installed according to all national and local codes having jurisdiction. The operation of the boiler must be verified and all safety controls checked. Any defect or abnormal operations must be corrected immediately. The entire system requires annual service and cleaning at least once a year.

# Installation codes

• THE BOILER SHALL BE ASSEMBLED AND INSTALLED BY A QUALIFIED PROFESSIONAL ONLY. STRICT COMPLIANCE WITH THESE INSTALLATION AND OPERATING INSTRUCTIONS IS A PRECONDITION FOR THE CORRECT AND GUARANTEE OF THE BOILER.

• THE INSTALLATION MUST CONFORM TO THE REQUIREMENTS OF THE AUTHORITY HAVING JURISTRICTION OR, IN THE ABSENCE OF SUCH REQUIREMENTS, TO THE CAN/CGA B-149 FUEL GAS INSTALLATION CODES AND CSA B-139 OIL INSTALLATION CODES.

• WHERE REQUIRED BY THE AUTHORITY HAVING JURISTRICTION, THE INSTALLATION MUST CONFORM TO THE STANDARD FOR CONTROLS AND SAFETY DEVICES FOR AUTOMATICALLY FIRED BOILERS ANSI/ASME CSD-1.

• THE INSTALLATION OF THE RELIEF VALVE SHALL BE CONSISTENT WITH ANSI/ASME BOILER PRESSURE VESSEL CODE, SECTION IV CSA B51.

• THE BOILER MUST NOT BE INSTALLED ON CARPETING.

• IF AN EXTERNAL ELECTRICAL SOURCE IS UTILIZED, THE BOILER WHEN INSTALLED, MUST BE ELECTRICALLY BONDED TO GROUND IN ACCORDANCE WITH THE REQUIREMENTS OF THE AUTHORITY HAVING JURISTRICTION OR, IN THE ABSENCE OF SUCH REQUIREMENTS, WITH THE CANADIAN ELECTRICAL CODE PART 1, CSA C22.1, ELECTRICAL CODE.

**LABEL ALL WIRES PRIOR TO DISCONNECTION WHEN SERVICING CONTROLS. WIRING CAN CAUSE IMPROPER OPERATION AFTER SERVICINGS. "VERIFY PROPER OPERATION AFTER SERVICE".**

# General

The **GT300 A/II** are series of oil or gas fired, cast iron, automatic boilers.

## 1 Uncrating

Upon arrival, check shipment to ensure all parts have been shipped. Inspect all items for delivery damage. Report all damage and shortages to the delivery carrier. Report any damage and shortages to the Distributor.

## 2 Packing

See the separate assembly instruction book.

For the optional equipment you may use with this boiler, see the current price list.

| Item | | Unit | Model | | | | | |
|---|---|---|---|---|---|---|---|---|
| | | | GT 304 A/II | GT 305 A/II | GT 306 A/II | GT 307 A/II | GT 308 A/II | GT 309 A/II |
| Firing Sequence | | | Consult Burner Technical Data | | | | | |
| [CSA] - Gas Input | | MBH | 404 | 598 | 808 | 1,024 | 1,226 | 1,442 |
| | | kW | 118 | 175 | 237 | 300 | 359 | 423 |
| [CSA] - # 2 Fuel Oil Input | | US GPH | 2.80 | 4.15 | 5.60 | 7.10 | 8.50 | 10.00 |
| [CSA] - Output [Gas-Oil] | | MBH | 343 | 509 | 686 | 870 | 1,042 | 1,226 |
| | | kW | 100.6 | 149.1 | 201.2 | 255.1 | 305.3 | 359.2 |
| [NET] - Output [Gas-Oil] | | MBH | 298 | 442 | 597 | 757 | 906 | 1,066 |
| Cast Iron Sections | | # | 4 | 5 | 6 | 7 | 8 | 9 |
| Flue-way baffles | | # | 6 | 10 | 10 | 10 | 12 | 12 |
| Water Capacity | | US Gal | 25.37 | 30.65 | 35.94 | 41.22 | 46.51 | 51.80 |
| | | Liter | 96 | 116 | 136 | 156 | 176 | 196 |
| Water Resistance [ΔT = °F] | 18° F | Ft. $H_2O$ | 0.368 | 0.60221 | 1.0371 | 1.539 | 2.275 | 3.5129 |
| | 27° F | Ft. $H_2O$ | 0.1539 | 0.24758 | 0.47508 | 0.6524 | 1.007 | 1.539 |
| | 36° F | Ft. $H_2O$ | 0.0869 | 0.1405 | 0.26765 | 0.36802 | 0.56876 | 0.86986 |
| Combustion Chamber Dimensions | Diameter [equivalent] | Inch | 14.84 | | | | | |
| | | mm | 377 | | | | | |
| | Depth | Inch | 24.45 | 30.75 | 37.05 | 43.35 | 49.65 | 54.96 |
| | | mm | 621 | 781 | 941 | 1,101 | 1,261 | 1,396 |
| | Volume | $Ft^3$ | 3.39 | 4.31 | 5.23 | 6.14 | 7.06 | 7.98 |
| | | $m^3$ | 0.096 | 0.122 | 0.148 | 0.174 | 0.2 | 0.226 |
| MAWP [Water] | | PSI | ASME IV Rating Class 30 - (81 PSI) [See Canadian Provincial CRN approvals] | | | | | |
| Min. Safety Relief Capacity | | MBH | 343 | 509 | 686 | 870 | 1,042 | 1,226 |
| FA 122 Panel | Electrical Connection | V/P/H | 120/1/60 | | | | | |
| | Max. Water Temp. Safety Limit [MR] | ° F | 248 | | | | | |
| | | ° C | 120 | | | | | |
| | Water Operating Temperature Range | ° F | 104 - 185 | | | | | |
| | | ° C | 40 - 85 | | | | | |
| Chamber Resistance | | Inch w.c. | 0.80 | 0.16 | 0.28 | 0.48 | 0.72 | 0.88 |
| | | mbar | 0.2 | 0.4 | 0.7 | 1.2 | 1.8 | 2.2 |
| Gas-Vent Category | | # | I, II - III or IV | | | | | |
| Boiler Vent Connection | | Inch | 7 | 7 | 7 | 8 | 8 | 8 |
| Weight [Dry] | | lb | 1,124 | 1,340 | 1,530 | 1,744 | 1,953 | 2,154 |
| | | kg | 510 | 608 | 694 | 791 | 886 | 977 |

## Note:

- CSA - MBH Output based on Thermal Efficiency Test According to ANSI Z21.13a/CSA 4.9a-2005
- All Models Certified for 0 - 2,000 feet ASL installation altitude, consult factory for higher altitudes
- [NET] MBH Output Factor 1.15, Allowance for Piping and Pickup Losses
- Chamber Resistance Based on Neutral Chimney-Vent Pressure
- Gas Vent Category Based on Several Factors [$CO_2$ content, Vent Pressure & Net-Flue Gas Temp]
- Approved for Direct-Vent, Use Only Approved Venting as Listed
- Natural Draft Applications, Approved for Type L vent [Gas-Oil] or Type B Vent [Gas Only]
- Conversion Btu to kW = 3,412 Btu per kW
- All Models are Design Certified & Eligible to Bear Approval Marking as Shown.
- All Models Certified to Fire; # 2 oil, Natural & Propane Gases. Consult factory for Available Burners.
- All Models Comply and Certified in Accordance to the latest Canadian & US standards
- To Obtain Current IBR Ratings, consult their publications and website.

## GT 300 A/II

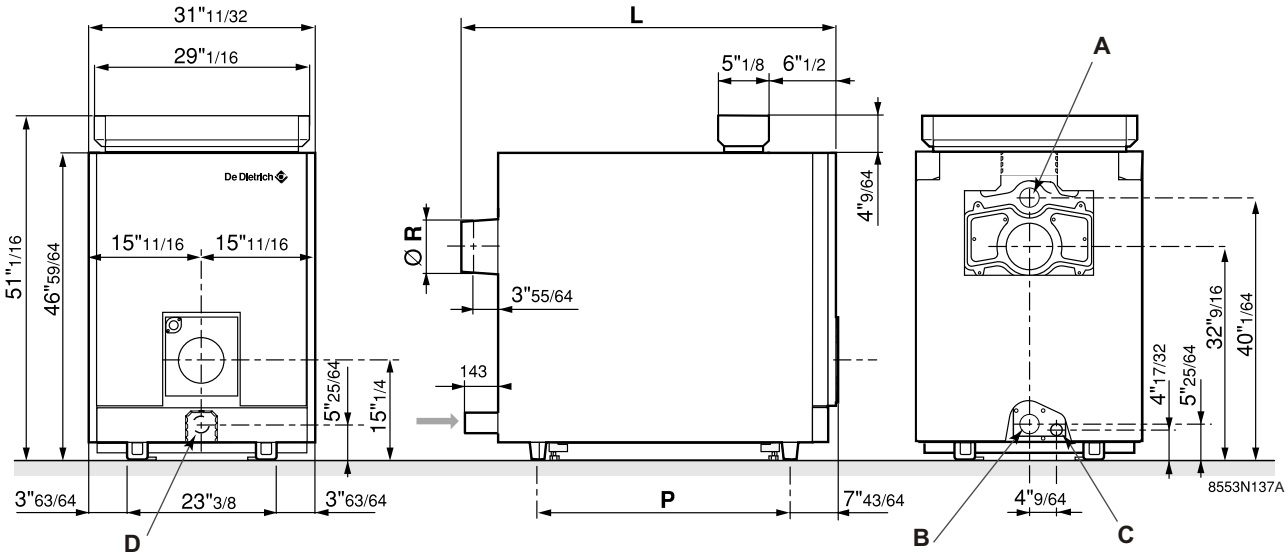


**A** Water flow tapping 2 1/2" NPSC

**B** Water return 2 1/2" NPSC

**C** Drain 1 1/2" FPT

**D** Rp 2 1/2 diameter sludge removal hole

| Type of boiler | GT 304 A/II | GT 305 A/II | GT 306 A/II | GT 307 A/II | GT 308 A/II | GT 309 A/II |
|---|---|---|---|---|---|---|
| L | 38 5/8" | 44 59/64" | 51 7/32 | 57 33/64" | 63 13/16" | 70 7/64" |
| P | 19 9/32 | 25 19/32" | 31 7/8 | 38 3/16" | 44 31/64" | 50 25/32" |
| Ø R | 7" | 7" | 7" | 8" | 8" | 8" |

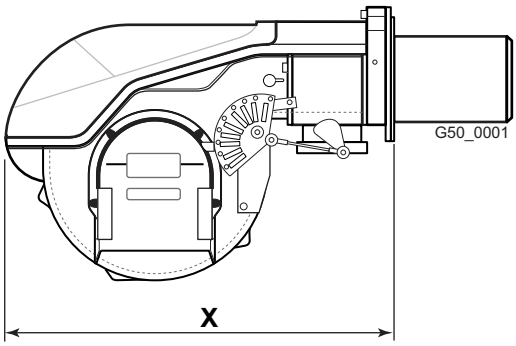


| Dimension "X" Max. Burner Length (inches) | | | | | |
|---|---|---|---|---|---|
| Boiler Model | Riello | Weishaupt | Power Flame | Fuel Master | Gordon Piatt |
| GT304 A/II | 10 | 19 | 22 1/4 | 19 1/4 | 26 |
| GT305 A/II | | | | | |
| GT306 A/II | 26 15/32 | | | | |
| GT307 A/II | | | | | |
| GT308 A/II | | 23 | 25 1/8 | | |
| GT309 A/II | | | | | |

**Notes:**

- Dimension are for gas burner only
- Oil and combination oil/gas, refer to burner manufacturer specifications

## 1 Installation

The GT 300 A/II boiler has a base frame, although a housekeeping pad is recommended to keep steel parts out of casual water. Its furnace is closed, so it is not necessary to place it on a fireproof floor, but the floor must be able to bear the weight.

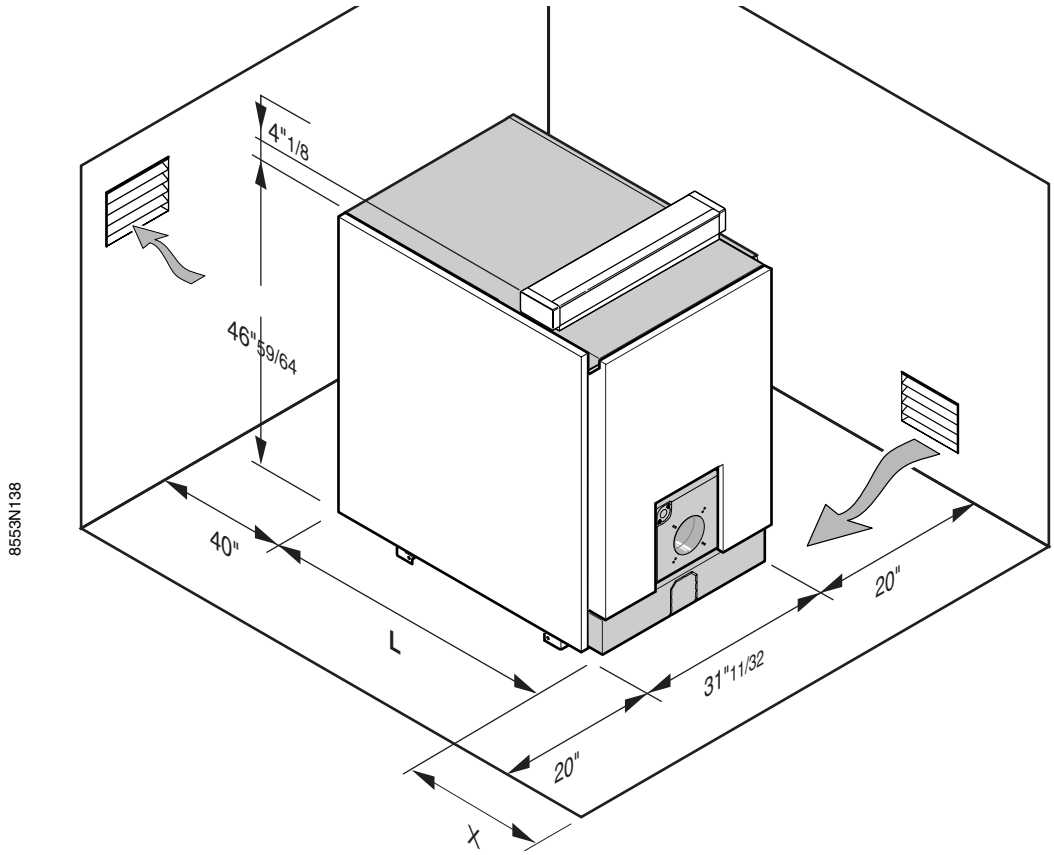


| Boiler type | L |
|---|---|
| GT 304 A/II | 33" |
| GT 305 A/II | 39 5/16" |
| GT 306 A/II | 45 9/16" |
| GT 307 A/II | 51 7/8" |
| GT 308 A/II | 58 3/16" |
| GT 309 A/II | 64 1/2" |

Dimension 'X', consult burner info. additional 24 inches for servicing

Caution : note addtional space required when the burner door is open.

Multiple installation of several boilers side by side, these dimensions need to be modified.

Illustration above showing minimum distances to combustible materials and servicing.

Boiler must not be installed on combustible material or on carpet.

## 2 Combustion Air Supply

Boilers operating in atmospheres that contain fluorides or chlorides such as beauty shops and automotive repair garages where air conditioning services are performed or industrial applications that may have corrosive elements in the air must have a clean source of combustion and ventilation air. Boiler damage by contaminants will void the warranty and any other responsibility or liability of De Dietrich Thermique/FES Ltd.

**Warning: Ensure boiler room is adequately ventilated and clear and free from combustible materials, gasoline and other flammable vapours and liquids.**

Combustion air supply must be provided according to national and local codes:
CSA B149.1 -.2 & CSA B139
ANSI Z223.1 & NFPA 31

## GT 300 A/II

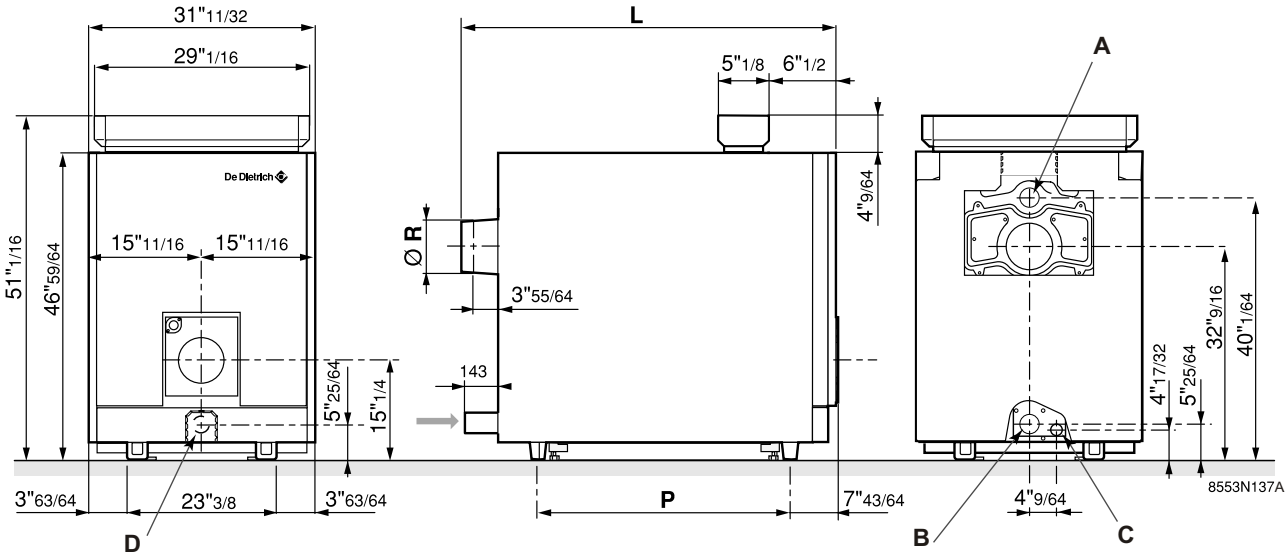


**A** Water flow tapping 2 1/2" NPSC

**B** Water return 2 1/2" NPSC

**C** Drain 1 1/2" FPT

**D** Rp 2 1/2 diameter sludge removal hole

| Type of boiler | GT 304 A/II | GT 305 A/II | GT 306 A/II | GT 307 A/II | GT 308 A/II | GT 309 A/II |
|---|---|---|---|---|---|---|
| L | 38 5/8" | 44 59/64" | 51 7/32 | 57 33/64" | 63 13/16" | 70 7/64" |
| P | 19 9/32 | 25 19/32" | 31 7/8 | 38 3/16" | 44 31/64" | 50 25/32" |
| Ø R | 7" | 7" | 7" | 8" | 8" | 8" |

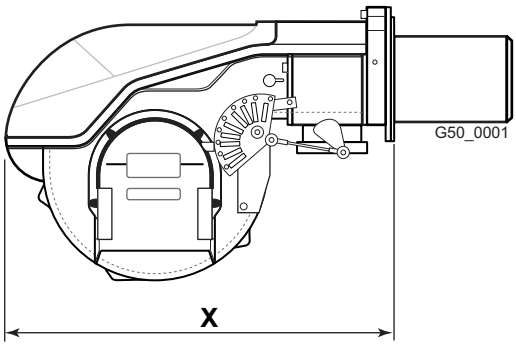


| Dimension "X" Max. Burner Length (inches) | | | | | |
|---|---|---|---|---|---|
| Boiler Model | Riello | Weishaupt | Power Flame | Fuel Master | Gordon Piatt |
| GT304 A/II | 10 | 19 | 22 1/4 | 19 1/4 | 26 |
| GT305 A/II | | | | | |
| GT306 A/II | 26 15/32 | | | | |
| GT307 A/II | | | | | |
| GT308 A/II | | 23 | 25 1/8 | | |
| GT309 A/II | | | | | |

**Notes:**

- Dimension are for gas burner only
- Oil and combination oil/gas, refer to burner manufacturer specifications

# 5. Boiler Venting & Chimney General

## Caution & Warning:

*It is advised and recommended that the heating contractor-professional apply vent materials that are approved and agency listed. Installation of any venting must follow all local codes in conjunction with vent manufacturer instructions and appliance manufacturer instructions.*

All De Dietrich GT series oil-gas fired cast iron boilers are high performance boilers that could operate under all 4 vent categories as established by ANSI Z21.13/CSA 4.9 Standard. To assist with application where the vent category is unknown a graph below has been provided to assist you in determining the vent category and what venting materials would be acceptable. Although the gas vent categories were developed specifically for gas fired appliances, using this information is helpful for oil fired boilers. It is very important the venting be selected according to the conditions that the boiler will operate under, minimum and maximum firing conditions of the boiler must be respected. The venting installed must comply and be certified to all applicable codes and standards for each jurisdiction.

## Gas-Vent Category [4] Definitions:

**Cat. I**
A Boiler, which operates with a non-positive vent (breech) pressure and flue gas temperatures which avoids excessive condensation production in the chamber and venting.

**Cat. II**
A Boiler, which operates with a non-positive vent (breech) pressure and flue gas temperatures produce condensation production in the chamber and venting.

**Cat. III**
A Boiler, which operates with a positive vent (breech) pressure and flue gas temperatures which avoids excessive condensation production in the chamber and venting.

**Cat. IV**
A Boiler, which operates with a positive vent (breech) pressure and flue gas temperatures produces condensation production in the chamber and venting.

## Chart A

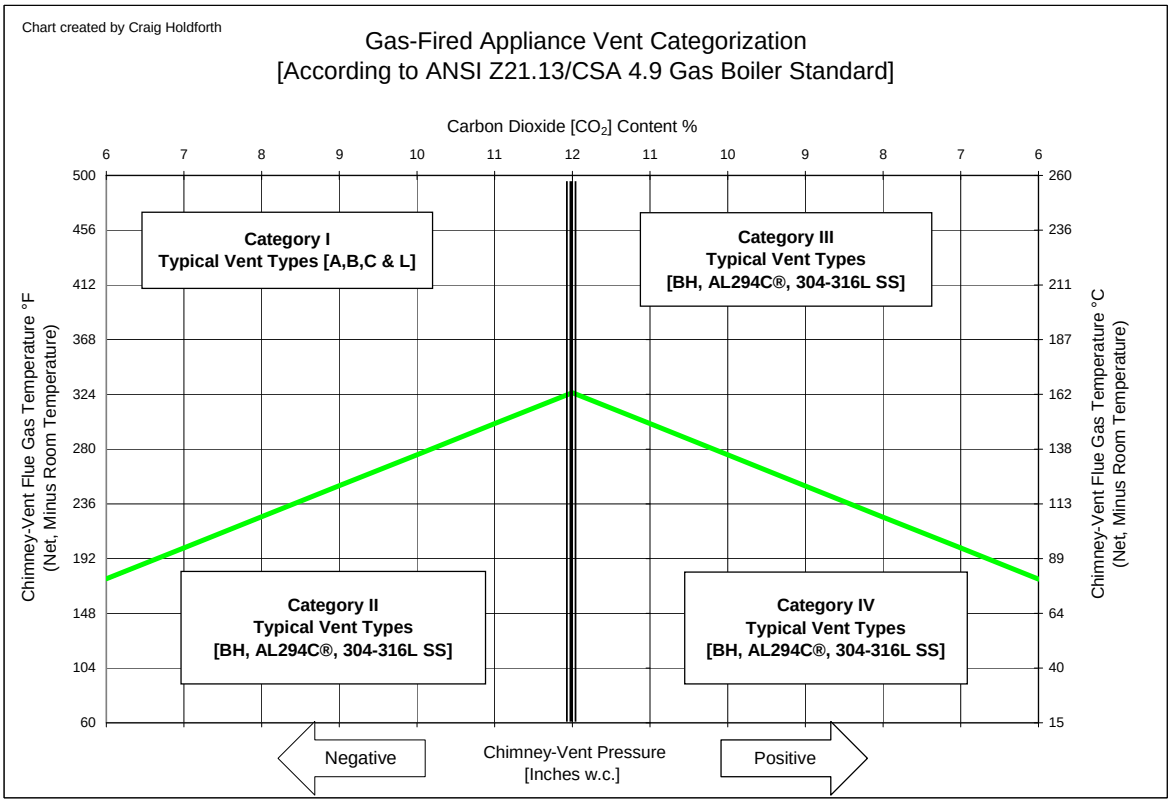

### 5.1 Boiler Venting – Category I & II Typical Layouts and Requirements.

**Caution & Warning:**
Improperly sealed venting system could result in carbon monoxide [CO] poisoning; ensure adequate support and fastening of the system. Ensure venting can safely exhaust all flue gases outside in an effective manner. These systems must operate under a negative vent pressure condition that is stable.

**Warning & Cautions for Co-Venting:**
Co-venting with other appliances shall conform latest ANSI Z223.1 & CAN/CGA 149 installation codes, any improper operation shall be corrected, the common venting shall be sized according to the appropriate tables in Part II of the above mentioned codes.

**Category I Vent Systems Requirements:**

1. Flue gas temperatures above the green line shown in chart A.
2. Approved type of venting for category I appliances.
3. A barometric draft control maybe employed as required, but is not necessary for correct boiler operation. Consult a chimney-vent specialist for correct application and usage.
4. Breeching and chimney vent sized in accordance to local and national codes or by good engineering methods.
5. Vent safety device equipped on the venting or as equipped on burner.
6. Condensate TEE fitting supplied on the boiler breeching as close as possible and be orientated to avoid accumulation of flue gas condensation in the boiler or venting is also used to determine flue gas emissions.

**Category II Vent Systems Requirements:**

1. Flue gas temperatures below the green line shown in chart A.
2. Approved type of venting for category II appliances.
3. A barometric draft control maybe employed as required, but is not necessary for correct boiler operation. Consult a chimney-vent specialist for correct application and usage.
4. Breeching and chimney vent sized in accordance to local and national codes or by good engineering methods.
5. Vent safety device equipped on the venting or as equipped on burner.
6. Condensate TEE fitting supplied on the boiler breeching as close as possible and be orientated to avoid accumulation of flue gas condensation in the boiler or venting is also used to determine flue gas emissions.

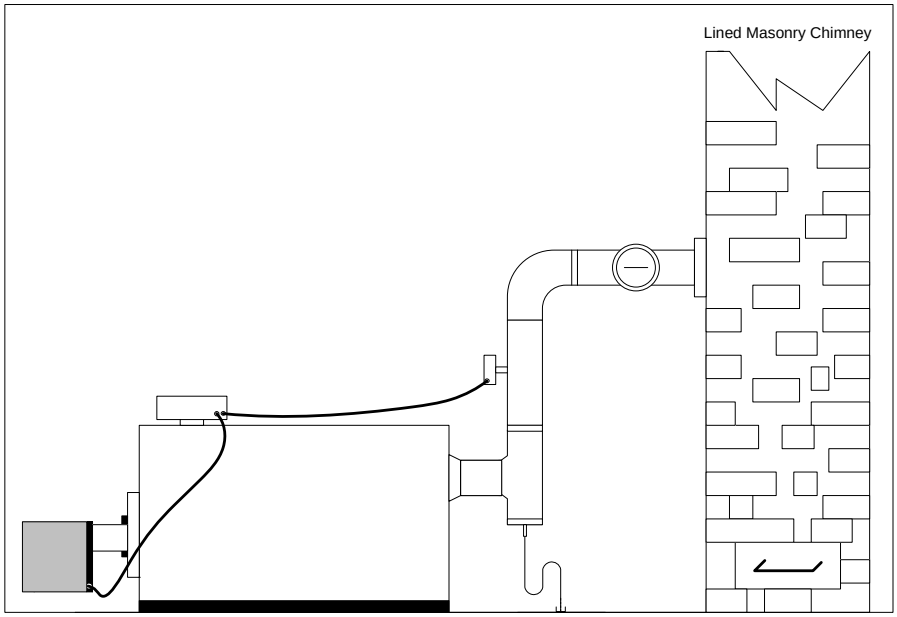


## Caution-Warning:

Flue gas condensation is very aggressive and corrosive which could lead to failure of the venting system or drains, consult local and national codes regarding flue gas condensation disposal. The P-trap assembly must be properly filled with water to avoid escape of flue gas emissions. The flue gas condensation may require neutralization prior to entering the drain.

### 5.2 Boiler Venting – Category III & IV Vent Systems Typical Layouts and Requirements.

**Caution & Warning:**
Improperly sealed venting system could result in carbon monoxide [CO] poisoning; ensure adequate support and fastening of the system. Ensure venting can safely exhaust all flue gases outside in an effective manner. These systems must operate under a positive vent pressure condition that is stable.

**Warning & Cautions for Co-Venting:**
Co-venting with other appliances shall conform latest ANSI Z223.1 & CAN/CGA 149 installation codes, any improper operation shall be corrected, the common venting shall be sized according to the appropriate tables in Part II of the above mentioned codes.

**Category III Vent Systems Requirements:**

1. Flue gas temperatures above the green line shown in chart A.
2. Approved type of venting for category III appliances
3. Breeching and chimney diameter sized in accordance to national & local codes or by good engineering methods.
4. Vent safety device equipped on burner [MR]
5. Condensate TEE fitting supplied on the boiler breeching as close as possible and be orientated to avoid accumulation of flue gas condensation in the boiler or venting.

**Category IV Vent Systems Requirements:**

1. Flue gas temperatures below the green line shown in chart A.
2. Approved type of venting for category IV appliances
3. Breeching and chimney diameter sized in accordance to national & local codes or by good engineering methods.
4. Vent safety device equipped on burner [MR]
5. Condensate TEE fitting supplied on the boiler breeching as close as possible and be orientated to avoid accumulation of flue gas condensation in the boiler or venting.

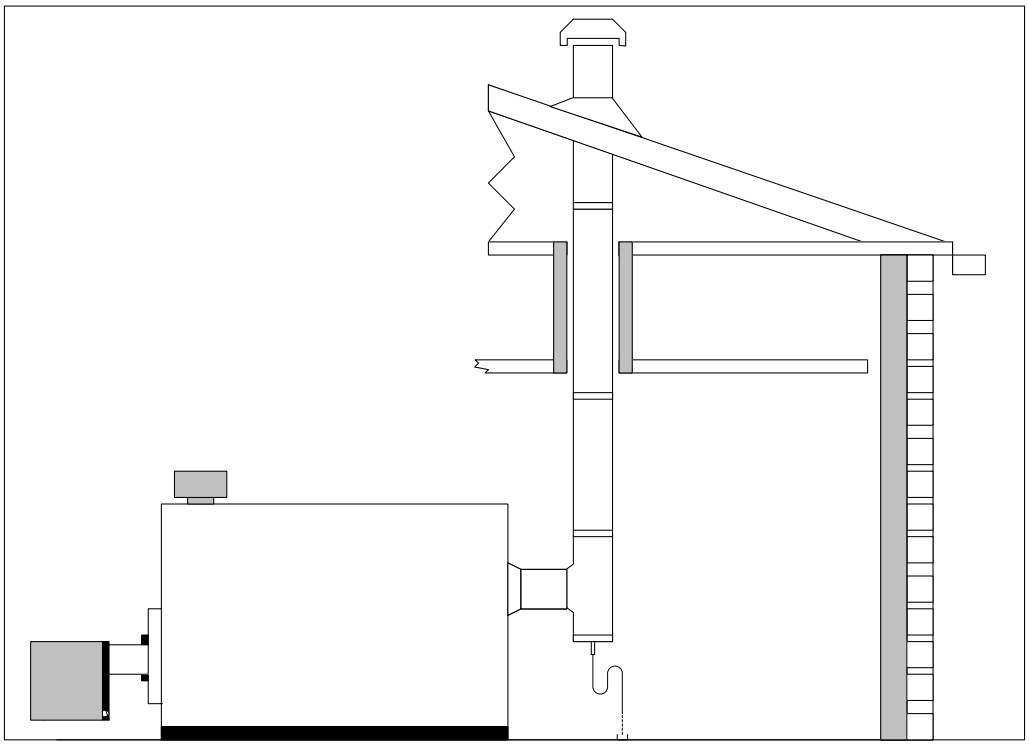

## Caution-Warning:

Flue gas condensation is very aggressive and corrosive which could lead to failure of the venting system or drains, consult local and national codes regarding flue gas condensation disposal. The P-trap assembly must be properly filled with water to avoid escape of flue gas emissions. The flue gas condensation may require neutralization prior to entering the drain.

### 5.3 Boiler Venting – Side-Wall or Direct Vent Systems Typical Layouts and Requirements.

**Caution & Warning:**

Improperly sealed venting system could result in carbon monoxide [CO] poisoning; ensure adequate support and fastening of the system. Ensure venting can safely exhaust all flue gases outside in an effective manner. These systems must operate under a positive vent pressure condition that is stable. Do not Co-Vent with any other appliance, the venting system was designed for single appliance venting only.

**Side-wall & Direct Vent Systems:**

These systems do not fall under any of the gas vent categories, these systems are pre-engineered. These applications of this venting system must be followed exactly, for safe, efficient and trouble free operation.

**System Requirements**:

1. Venting sized accordance to direct vent table
2. Type “BH” [AL294C®] vent material
3. Condensate TEE fitting supplied on the boiler breeching as close as possible and be orientated to avoid accumulation of flue gas condensation in the boiler or venting is also used for determining flue gas emissions.
4. Vent termination TEE
5. Vent safety device equipped on burner [MR]

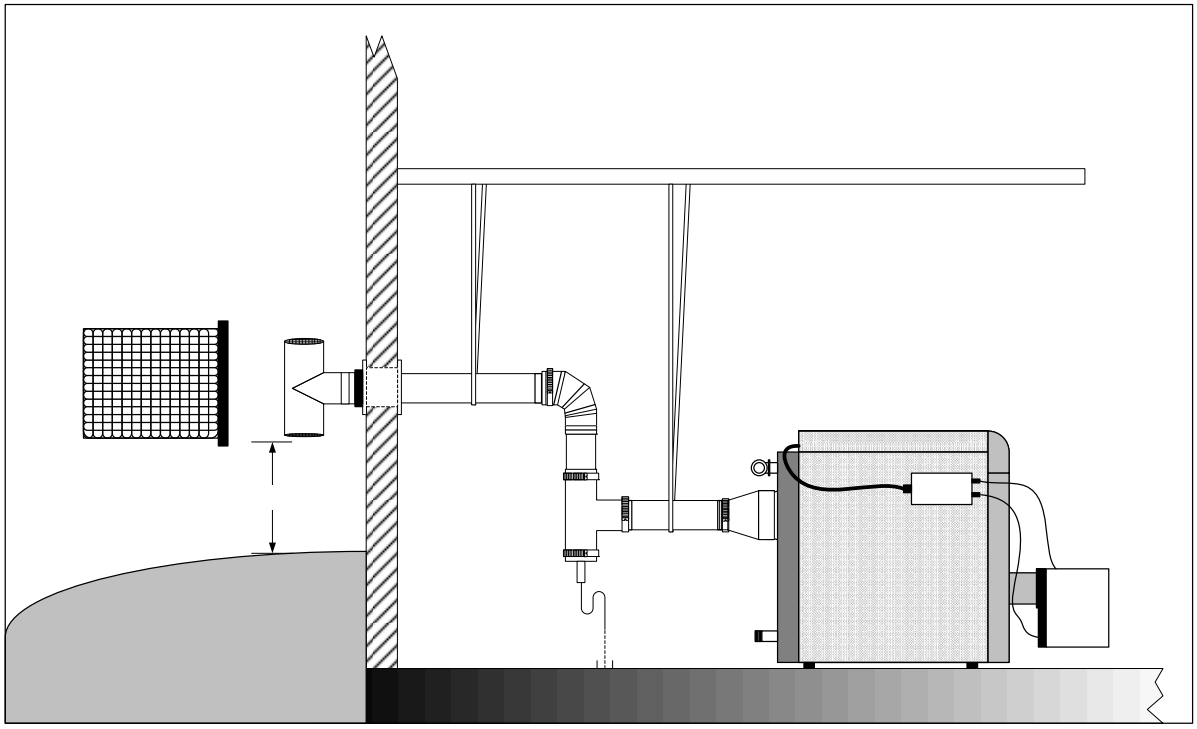

Vent Termination Locations & Warning – See Section 5.5

**Caution-Warning:**

Flue gas condensation is very aggressive and corrosive which could lead to failure of the venting system or drains, consult local and national codes regarding flue gas condensation disposal. The P-trap assembly must be properly filled with water to avoid escape of flue gas emissions. The flue gas condensation may require neutralization prior to entering the drain.

## 5.4 Boiler Venting – Side-wall or Direct Vent Systems Sizing Tables & Vent Safety Device

- All venting lengths must be calculated to equivalent lengths, all application must include at least one 90° elbow
- Venting must be a type 'BH" [AL294C® material]
- Maximum vent length [equivalent] = 30 ft. [9m]
- Minimum vent length [equivalent] 5 ft. [1.5m]
- Maximum number of 90° elbows = 2 or 3 45° elbows, each 90° elbow is equivalent to 10 ft. or straight pipe, the 45° elbow is equivalent = 5 ft.
- Condensate TEE must be provided [equivalent length = 7 ft.]
- Appliance reducing adapter [equivalent length 3 ft.]
- Sealed combustion, combustion air intake sizing, must be sized according to the burner manufacturers instructions
- Vent [breeching] pressure shall not exceed 0.20 inches w.c. [0.50 mbar]
- Vent termination must be a TEE type, follow warning regarding termination locations. Do not include the termination TEE length in the vent length calculation.
- Venting shall be sloped, so any condensation developed will drain through the condensate TEE fitting
- Vent safety device, differential air pressure switch [manual reset] NC switch opens on rise of pressure.
- Optional function of power burners which can employ an post purge function to exhaust flue gases for a fixed time [1 minute to 4 minutes maximum]
- Burner employing a standby air damper closed position, the closed position should be slightly opened to allow hot flue gases to escape upward through venting and not be entrapped in the combustion head. Important note, that in negative building pressures, the observation and odor of flue gases may enter the boiler room.

**Determining vent length [equivalent] Example:**

| | |
|---|---|
| Appliance reducing adapter | [x1] = 3 ft. |
| Condensate TEE | [x1] = 7 ft. |
| 12" vent straight vent pipe | [x3] = 3 ft. |
| Elbow 90° | [x1] = 10 ft. |
| Termination TEE | [x1] = 0 ft. |
| Length [equivalent] = | 23 ft. |

**GT 300 A/II Series**

| Model | Boiler Connection ø | Oil-Gas Vent ø | [Δp] Pressure switch Setting [inches w.c.] |
|---|---|---|---|
| GT 304 A/II | 7 inch | 5 inch | Set vent safety pressure switch 150% above burner gas manifold or head pressure setting |
| GT 305 A/II | 7 inch | 5 inch | |
| GT 306 A/II | 7 inch | 5 inch | |
| GT 307 A/II | 8 inch | 6 inch | |
| GT 308 A/II | 8 inch | 6 inch | |
| GT 309 A/II | 8 inch | 6 inch | |

**GT 400 A Series**

| Model | Boiler Connection ø | Oil-Gas Vent ø | [Δp] Pressure switch Setting [inches w.c.] |
|---|---|---|---|
| GT 408 A | 10 inch | 8 inch | Set vent safety pressure switch 150% above burner gas manifold or head pressure setting |
| GT 409 A | 10 inch | 8 inch | |
| GT 410 A | 10 inch | 8 inch | |
| GT 411 A | 12 inch | 10 inch | |
| GT 412 A | 12 inch | 10 inch | |
| GT 413 A | 12 inch | 10 inch | |
| GT 414 A | 12 inch | 10 inch | |

**GTE 500 A Series**

| Model | Boiler Connection ø | Oil-Gas Vent ø | [Δp] Pressure switch Setting [inches w.c.] |
|---|---|---|---|
| GTE 515 A | 16 inch | 12 inch | Set vent safety pressure switch 150% above burner gas manifold or head pressure setting |
| GTE 516 A | 16 inch | 12 inch | |
| GTE 517 A | 16 inch | 12 inch | |
| GTE 518 A | 16 inch | 12 inch | |
| GTE 519 A | 16 inch | 12 inch | |
| GTE 520 A | 16 inch | 12 inch | |

| Model | Boiler Connection ø | Oil-Gas Vent ø | [Δp] Pressure switch Setting [inches w.c.] |
|---|---|---|---|
| GTE 521 A | 16 inch | 12 inch | Set vent safety pressure switch 150% above burner gas manifold or head pressure setting |
| GTE 522 A | 18 inch | 14 inch | |
| GTE 523 A | 18 inch | 14 inch | |
| GTE 524 A | 18 inch | 14 inch | |
| GTE 525 A | 18 inch | 14 inch | |

### 5.5 All Side-wall and direct Vent termination locations installation precautions:

**Warning/Caution:**
In all cases avoid potential vent termination locations where excess debris or snow could accumulate and bock the vent termination to any degree.

Minimum clearance of 4 ft. [1.22m] horizontally from, and in no case above or below, unless a 4 foot [1.22m] horizontal distance is maintained, from electric meters, gas meters, regulators & relief equipment.

Do Not Co-Vent Any Direct Vent or Sidewall Venting System

**B149.1**
**(GAS INSTALLATIONS CANADA)**

**A VENT SHALL NOT TERMINATE…..**

Directly above a paved sidewalk or driveway which serves 2 buildings.
Less than 7 ft. any paved sidewalk or drive way
Less than 6 ft. of a combustion air inlet to any building
Less than 4 ft. above a meter/regulator assembly [horizontally] of the vertical center-line of the regulator vent outlet to a maximum vertical distance of 15 ft.
Less than 4 ft. of any gas service regulator vent outlet
Less than 1 ft. above grade or normal anticipated snow level for the area
Less than 3 ft. from windows, doors [that can be opened], combustion air supply or any appliance or building.
Underneath a veranda, porch or deck unless:

1. The veranda, porch or deck is fully open on a minimum of 2 sides beneath the floor
&
2. The distance between the top of the vent termination and the underside of the veranda, porch or deck is greater than 1 ft.

**B139-00**
**(OIL INSTALLATIONS CANADA)**

**A VENT SHALL NOT TERMINATE…..**

Directly above a paved sidewalk or driveway which serves 2 buildings.
Less than 7 ft. any paved sidewalk or drive way
Less than 6 ft. from an open-able window, door or mechanical combustion air supply
Less than 6 ft. of any combustion air inlet
Less than 3 ft. of the vertical centerline of the meter/regulator assembly on a horizontal plane perpendicular to the regulator
Less than 6 ft. of gas service regulator vent outlet
Less than 4 ft. of oil tank vent or oil tank fill inlet
Less than 1 ft. above grade or normal anticipated snow level for the area.
Within 6 ft. of a property line
Underneath a veranda, porch or deck
Flue gases are within 6 ft. of combustible material or any openings of surrounding buildings.
Less than 3 ft. from an inside corner or L-shaped structure
Where flue gases may be directed towards brickwork, siding or other construction that may cause damaged from heat or condensate from the flue gases.

**NFPA 54 / ANSI Z223**
**(GAS INSTALLATIONS USA)**

**A VENT SHALL NOT TERMINATE…..**

Less than 3 ft. of any combustion air inlet source located within 10 ft.
Less than 1 ft. from any obstructions
Less than 1 ft. above grade or normal anticipated snow level for the area.
Over public walkways, driveways or other areas where condensate or vapor could create nuisance or hazard or could be detrimental to the operation of regulators, relief's, valves or other equipment

**NFPA 31**
**(OIL INSTALLATIONS USA)**

**A VENT SHALL NOT TERMINATE…..**

Less than 5 ft. from vent outlet of the supply tank
Less than 7 ft. above walkways
Less than 1 ft. from any door, window or air inlet source
Less than 1 ft. from grade or snow level.
Less than 3 ft. from a air intake that is within 10 ft
Less than 1 ft. from soffit of the roof
Less than 3 ft. from any building corner or L shape structure

WARNING-CAUTION
Consult Local Codes & Authorities for other Requirements not mentioned

## 6 Dimensional information required for connection of the boiler

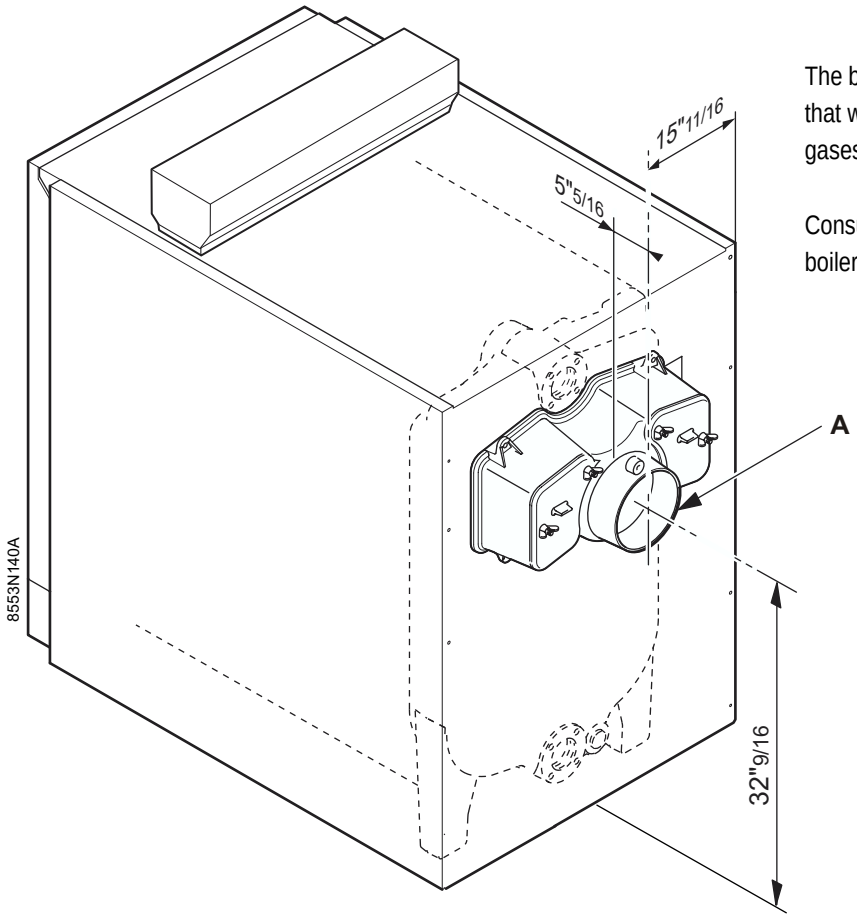


The boiler must be connected to venting system that will safely and effectively discharge all flue gases to the outside in an effective manner.

Consult local and national codes regarding the boiler breeching and chimney sizing.

**A : chimney connection :**

GT 304 A/II to GT 306 A/II : 7" ø

GT 307 A/II to GT 309 A/II : 8" ø

# Oil or gas connections

## 1 Specific technical information supplied with the burner

- The boiler and its individual shutoff valve must be disconnected from the gas supply piping system during any pressure testing of that system at test pressures in excess of 1/2 psi (3.5kPa),
- The boiler must be isolated from the gas supply piping system by closing its individual manual shutoff valve during any pressure testing of the gas supply piping system at test pressures equal to or less than 1/2 psi (3.5 kPa),
- The boiler shall be installed such that the gas ignition system components are protected from water (dripping, spraying, rain, etc.) during appliance operation and service (circulator replacement, condensate trap, control replacement, etc.),
- The boiler and its gas connection must be leak tested before placing the boiler in operation,
- After placing the boiler in operation, the ignition system safety shutoff device must be tested,
- Provision for vent, bleed and gas relief lines (when applicable),
- A sediment trap must be provided upstream of the gas controls,
- Location of manual main shutoff valve outside the jacket when codes require.

Follow the information and documentation as supplied with the burner, regarding:

The specific installation requirements, wiring, fuel supply and piping and all adjustments of the air and fuel and start-up procedure as be followed as supplied with the burner documentation

Consult the burner manufacturer regarding the required maintenance of the burner and the service intervals.

The entire heating system must be check once each heating season.

Do not start the burner/boiler unless all access cover and panels are in place.

## 1 Wiring

Wiring in accordance with the requirements of the authority having jurisdiction or, in the absence of such requirements, with the Canadian Electrical Code Part 1, CSA C22.1, Electrical Codes.

Warning/Caution:
Label all wiring prior to disconnection for servicing controls. Wiring errors can cause improper and dangerous operation.

"Verify Proper Operation After Serving"

## 2 Wiring procedure

De Dietrich boiler suggested field wiring procedure.

**1** : Top view

**2** : Boiler panel

**3** : Front

**A** : Race ways located under top panel of boiler

**B** : Wiring to be run in electrical race way to boiler control panel from ancillaries

Main power to 4x4 junction box or enter rear of boiler through race way.

**C** : 4x4 junction box location

**D** : Run BX cable between insulation and casing from boiler panel

**E** : Allow extra cable to swing burner open

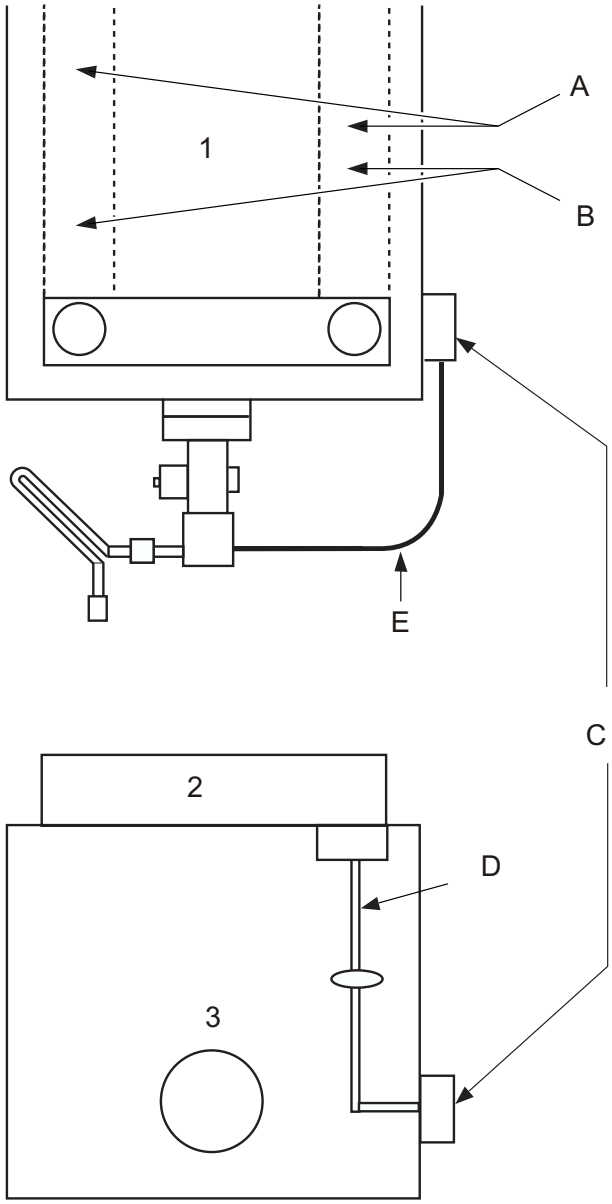

## Flexible Eutectic Sales Ltd. [De Dietrich North America] FA 122 Panel – Boiler Controller

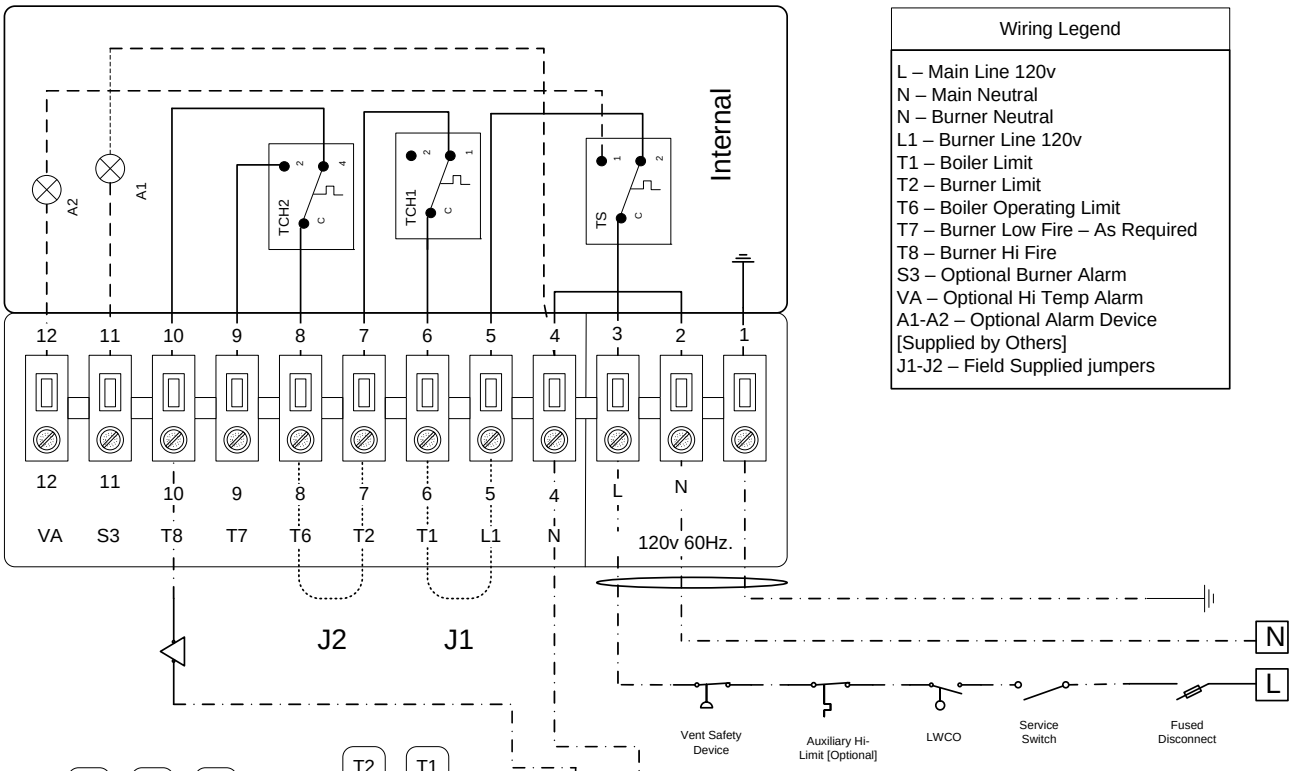


| Wiring Legend |
|---|
| L – Main Line 120v<br>N – Main Neutral<br>N – Burner Neutral<br>L1 – Burner Line 120v<br>T1 – Boiler Limit<br>T2 – Burner Limit<br>T6 – Boiler Operating Limit<br>T7 – Burner Low Fire – As Required<br>T8 – Burner Hi Fire<br>S3 – Optional Burner Alarm<br>VA – Optional Hi Temp Alarm<br>A1-A2 – Optional Alarm Device [Supplied by Others]<br>J1-J2 – Field Supplied jumpers |

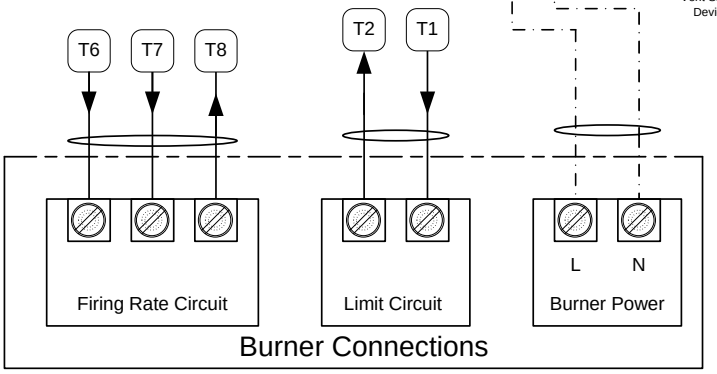


Consult burner manufacturer:

*All burner wiring*
*Modulating Signal and required Controls*
*Burner Motor May require additional power source*
*BMS Local-Remote Control Wiring.*

**WARNING – CAUTION:**

ALL ELECTRICAL CONNECTIONS MAYBE FROM MULTIPLE SOURCES

**Application Note for BMS or BAS systems:**
The Local-Remote switch or enable/disable forced relay, must interrupt the TCH2 control . TheTS & TCH1 limits must remain in the limit circuit.

### Panel Wiring Options:

| |
|---|
| On-Off Control [Single stage burners]<br>use jumper as shown |
| 2 Stage Control [2 Stage burners]<br>Remove jumper 2 install firing rate control from burner T6 – T8 |
| Progressive Modulating Control<br>[Multi-Stage burners]<br>Remove jumpers 1<br>Installed burner limit circuit between T1 & T2<br>Remove jumper 2<br>Install burner firing rate control between T6 [common] T7 [min rate] & T8 [max rate] |

### Wiring Symbols

| | |
|---|---|
| | Main fuse disconnect 6A 120V max |
| | Service Switch [Others] |
| | LWCO Device [As required] |
| | Vent Safety Device [NC] |
| | Burner Safety Interlock – Optional [Others] |
| | Auxiliary limit – Optional [Others] |
| | 120V Alarm indicator [Others] |
| | Factory Wiring |
| | Field Wiring [Others] |
| | Alarm Wiring [Others] |
| | Jumper Wiring [Others] |
| | Strain Relief [Others] |

## 1 Wiring

Wiring in accordance with the requirements of the authority having jurisdiction or, in the absence of such requirements, with the Canadian Electrical Code Part 1, CSA C22.1, Electrical Codes.

## 2 Wiring procedure

De Dietrich boiler suggested field wiring procedure.

**1** : Top view

**2** : Boiler panel

**3** : Front

**A** : Race ways located under top panel of boiler

**B** : Wiring to be run in electrical race way to boiler control panel from ancillaries

Main power to 4x4 junction box or enter rear of boiler through race way.

**C** : 4x4 junction box location

**D** : Run BX cable between insulation and casing from boiler panel

**E** : Allow extra cable to swing burner open

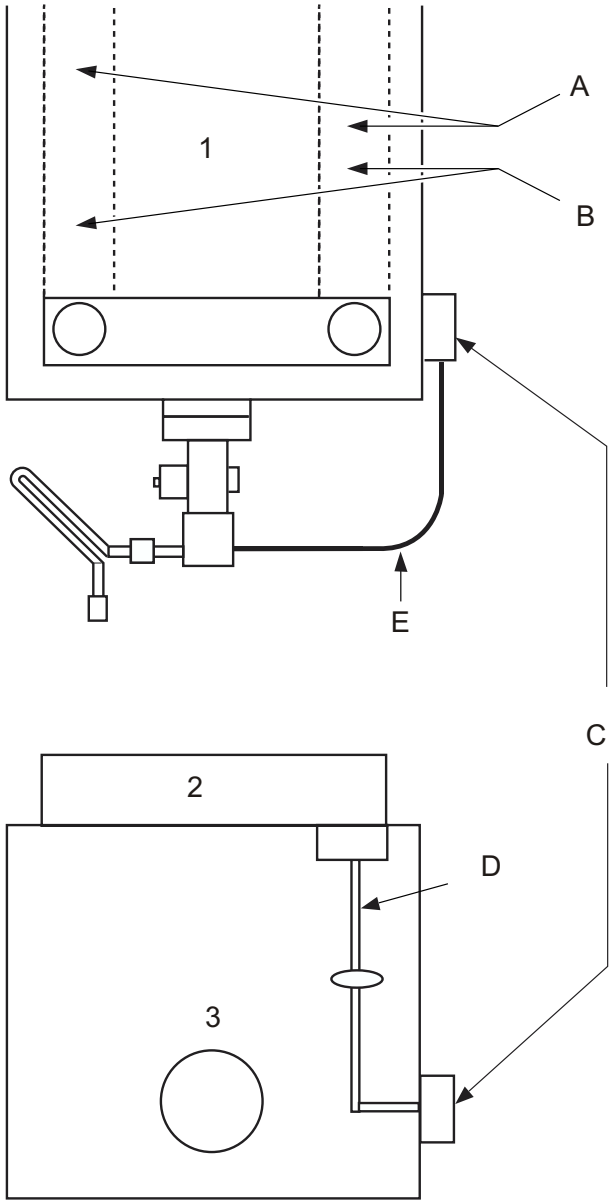

# FOR YOUR SAFETY READ BEFORE OPERATING

**WARNING: If you do not follow these instructions exactly, a fire or explosion may result causing properly damage, personal injury or loss of life.**

**A.** This appliance does not have a pilot. It is equipped with an ignition device wich automatically lights the burner. Do not try to light the burner by hand.

**B.** BEFORE OPERATING smell all around the appliance area for gas. Be sure to smell next to the floor because some gas is heavier than air and will settle on the floor.

WHAT TO DO IF YOU SMELL GAS

- Do not try to light any appliance.
- Do not touch any electric switch; do not use any phone in your building.
- Immediately call your gas supplier from a neighbor's phone. Follow the gas supplier's instructions.
- If you cannot reach your gas supplier, call the fire department.

**C.** Use only your hand to push in or turn the gas control knob. Never use tools. If the knob will not push in or turn by hand, don't try to repair it: call a qualified service technician. Force or attempted repair may result in a fire or explosion.

**D.** Do not use this appliance if any part has been under water. Immediately call a qualified technician to inspect the appliance and to replace any part of the control system and any gas control which has been under water.

## 1 Start up procedures

- Inspect for proper baffling insertion into flue passes. All clean-out doors properly sealed. Burner door closed and properly latched.
- Gas and oil systems ready. Proper vent connections. Required combustion and ventilation air provided.
- Waterside of system properly filled and vented of air.
- Lighting instruction followed.
- To be performed by a licensed tradesperson in accordance with the guidelines shown in this manual. Follow burner manufactures instructions.
- Mandatory factory start-up report to be completed and returned to comply with the warranty process.
- Proper operating instructions of equipment to be related to operating personnel.

## 2 Shut-down procedures

- Disengage all electrical power switches to heating system burners, pumps. Isolate all boiler valves and fuel valves.
- For off-season shutdown, open boiler combustion flue ways and clean. Ensure venting, chimney, combustion and ventilation air openings free from blockage. Do not drain waterside of system.
- Shutoff fuel supply lines

## 1 Boiler

It is not advisable to drain an installation, except in case of absolute necessity. Check the water level of the installation and top it off if necessary, avoiding a sudden inlet of cold water in the hot boiler.

Check for system leaks.

Professional water treatment is recommended.

**The good performance of the boiler depends on cleanliness.**

Cleaning the boiler must be carried out as often as required and at least, as for the flue once a year. The following operations are always carried out with the boiler and the power supply shut off.

- **Cleaning of the flue gas circuit :**

- switch off the electricity supply to the boiler
- unhook the front cover

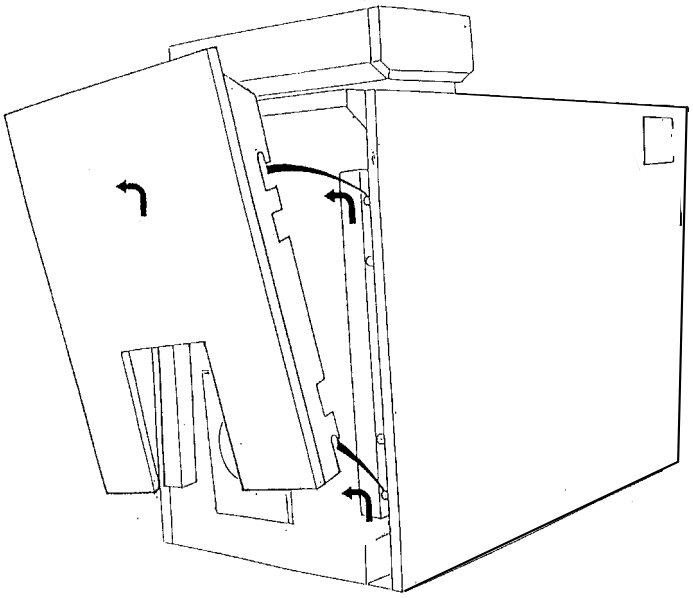

Ensure all access cover and doors are in place prior to starting the boiler-burner.

- open the sweeping door (upper door) by unscrewing the 4 lock nuts.

- remove the convection baffles,

- using the brush supplied, carefully sweep the 6 flue sections,

- also brush the convection baffles and the front face,

- if possible use a vacuum cleaner,

- put the convection accelerators back in place (pay attention to their direction),

- shut the door.

- **Maintenance of the combustion chamber**

- open the combustion chamber door (lower door) by unscrewing the 4 lock nuts

- brush the inside of the combustion chamber

- using a vacuum cleaner, vacuum up the soot deposits which have accumulated in the combustion chamber

- close the door and replace the front cover

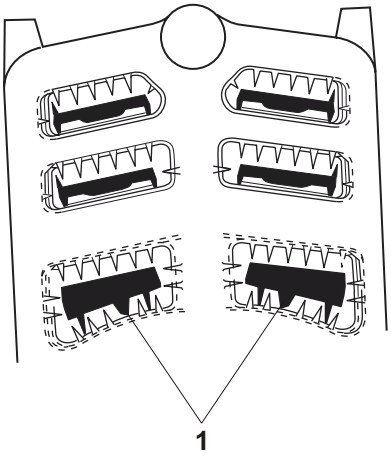


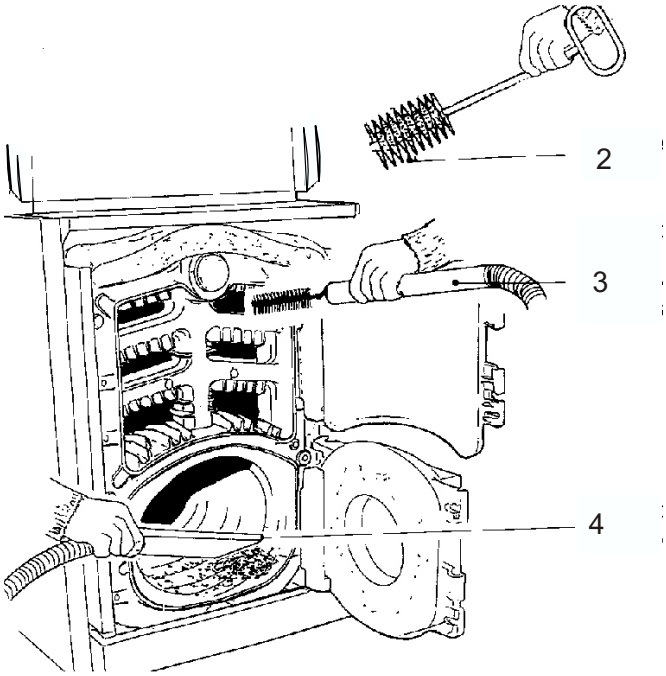


1 : stop pins

2 : brush

3 : vacuum cleaner brush

4 : vacuum cleaner

| Baffle Position | Baffle | Fraction | mm | GT 304 A/II | GT 305 A/II | GT 306 A/II | GT 307 A/II | GT 308 A/II | GT 309 A/II |
|---|---|---|---|---|---|---|---|---|---|
| Upper [3rd Pass] | 8219-0017 | 16 1/4 | 410 | 0 | 8 | 8 | 4 | 0 | 0 |
| Middle [2nd Pass] | 8219-0018 | 22 7/16 | 570 | 4 | 0 | 0 | 4 | 8 | 8 |
| Lower [1st Pass] | 8219-0019 | 16 1/4 | 412 | 2 | 2 | 2 | 2 | 4 | 2 |
| | 8219-0020 | 22 1/2 | 572 | 0 | 0 | 0 | 0 | 0 | 2 |

- **Cleaning the smoke box (Flue Hood)**

For this purpose :

-remove the sweeping left and right hand covers of the smoke box (2 wing nuts) and remove the soot which has accumulated using a vacuum cleaner

-replace the sweeping covers.

- **Burner maintenance :**

In accordance with the directions supplied with the burner.

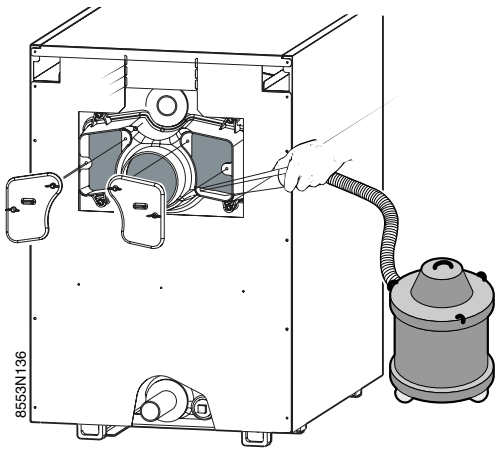

- Require annul system inspection of the heating boiler, burner and controls by qualified service personnel,
- Heating system check for safety control functions, system pressure, leaks, combustion and ventilation air should be done on a monthly schedule.

Extended Shutdown Periods

If the system is to be shutdown for any extended period of time, please follow these steps:

1. Shut off all pumps
2. Cap off venting of boiler at the boiler collars
3. Shut off supply & Return Valves
4. Shut off the fuel supply valves
5. Disconnect power at the panel
6. Clean boiler and venting

06/10/06 - 8553-4312B

While ordering spare parts, do not forget to provide **the code number given opposite the part reference**.

## BOILER BODY AND ACCESSORIES

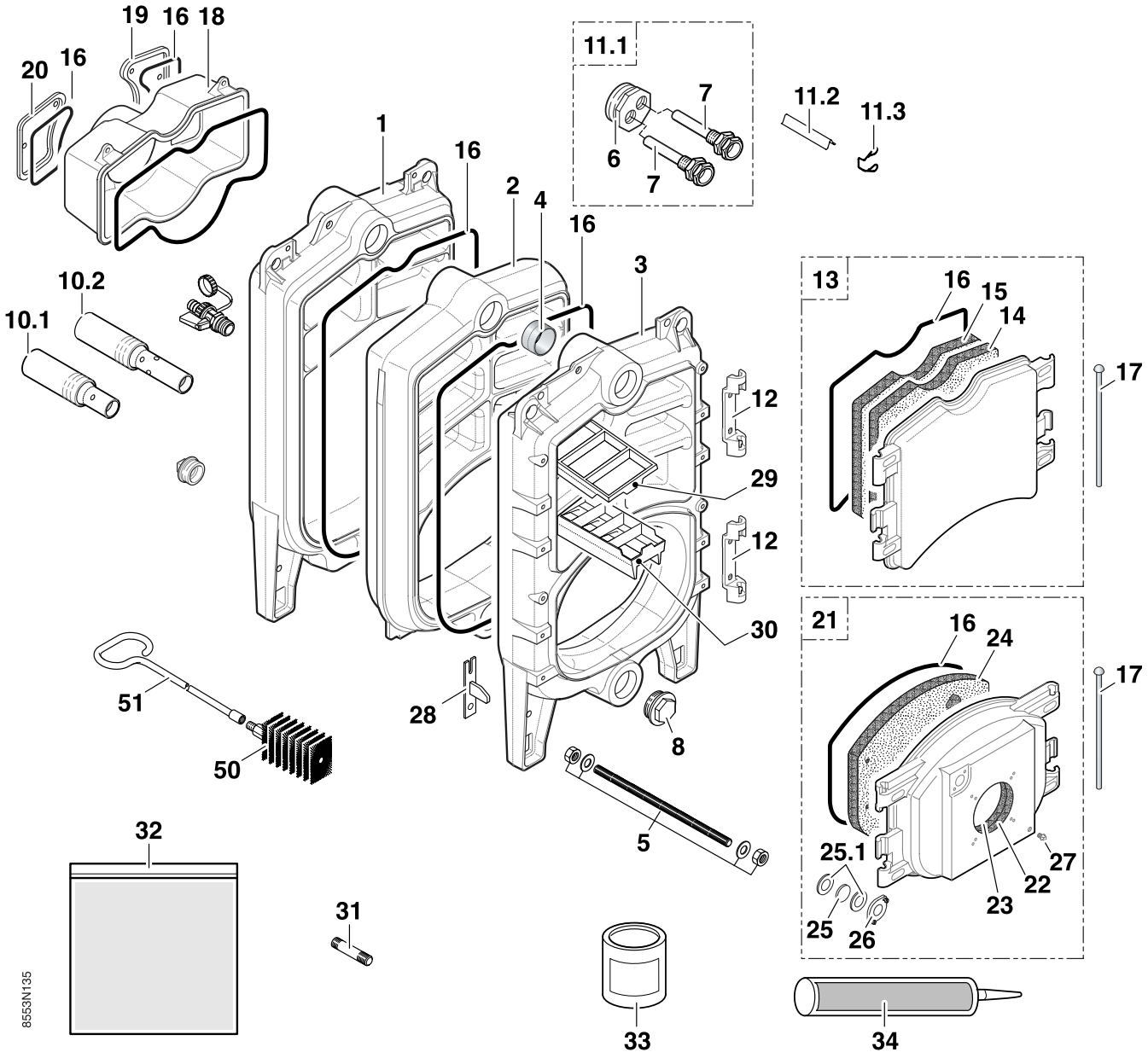

# BASE FRAME + INSULATION

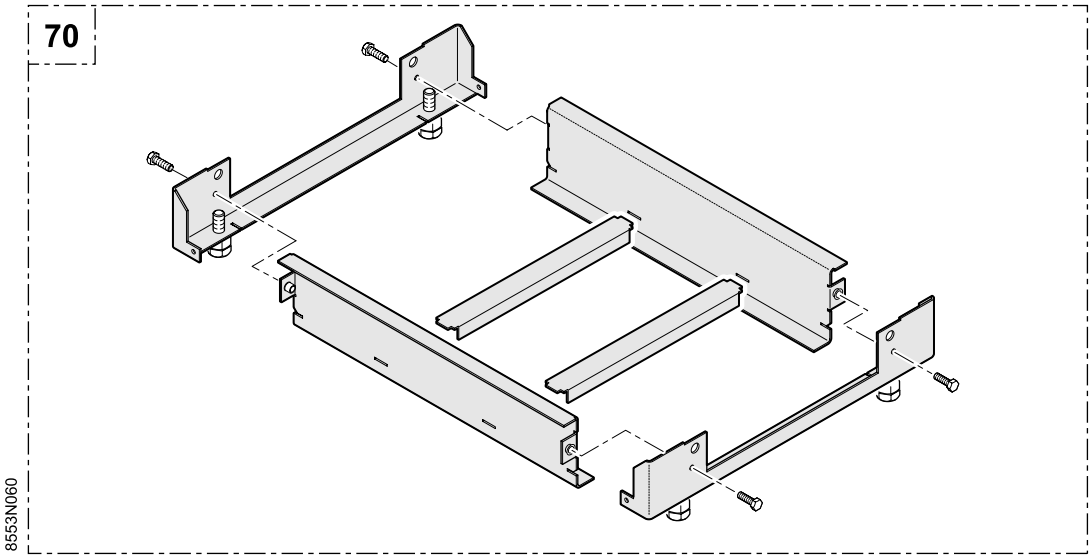


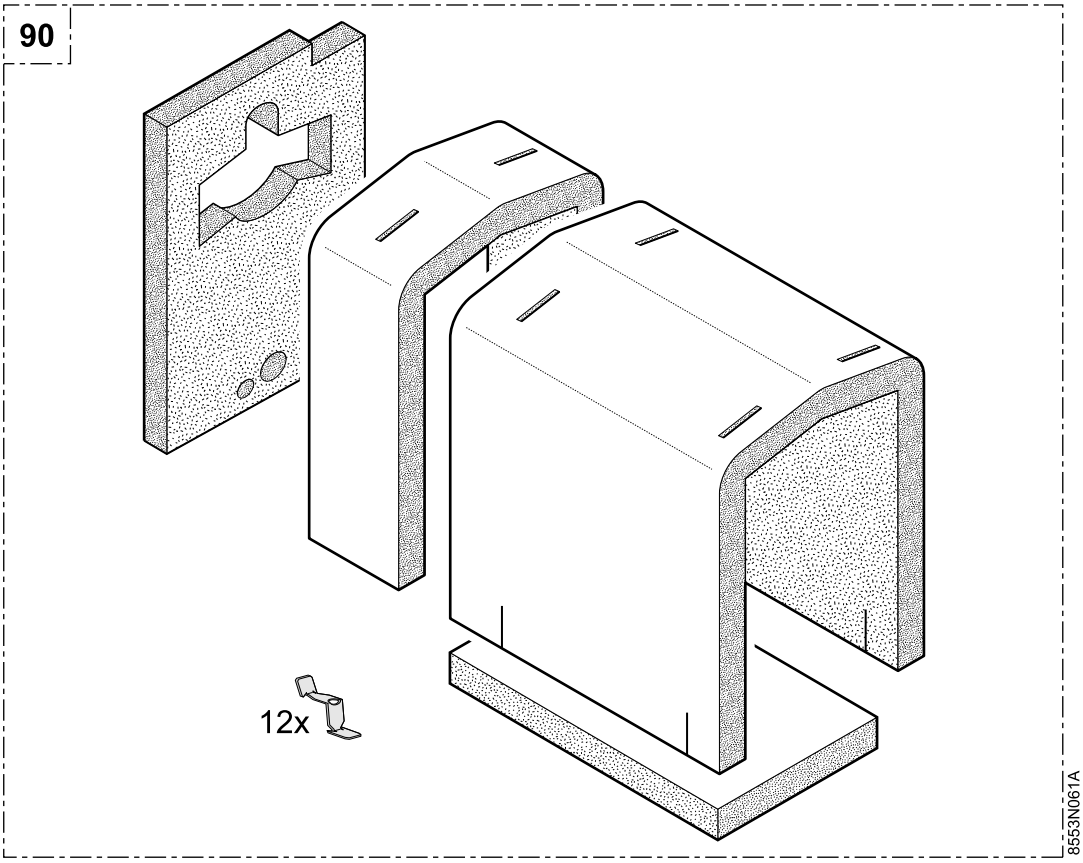

# CASING

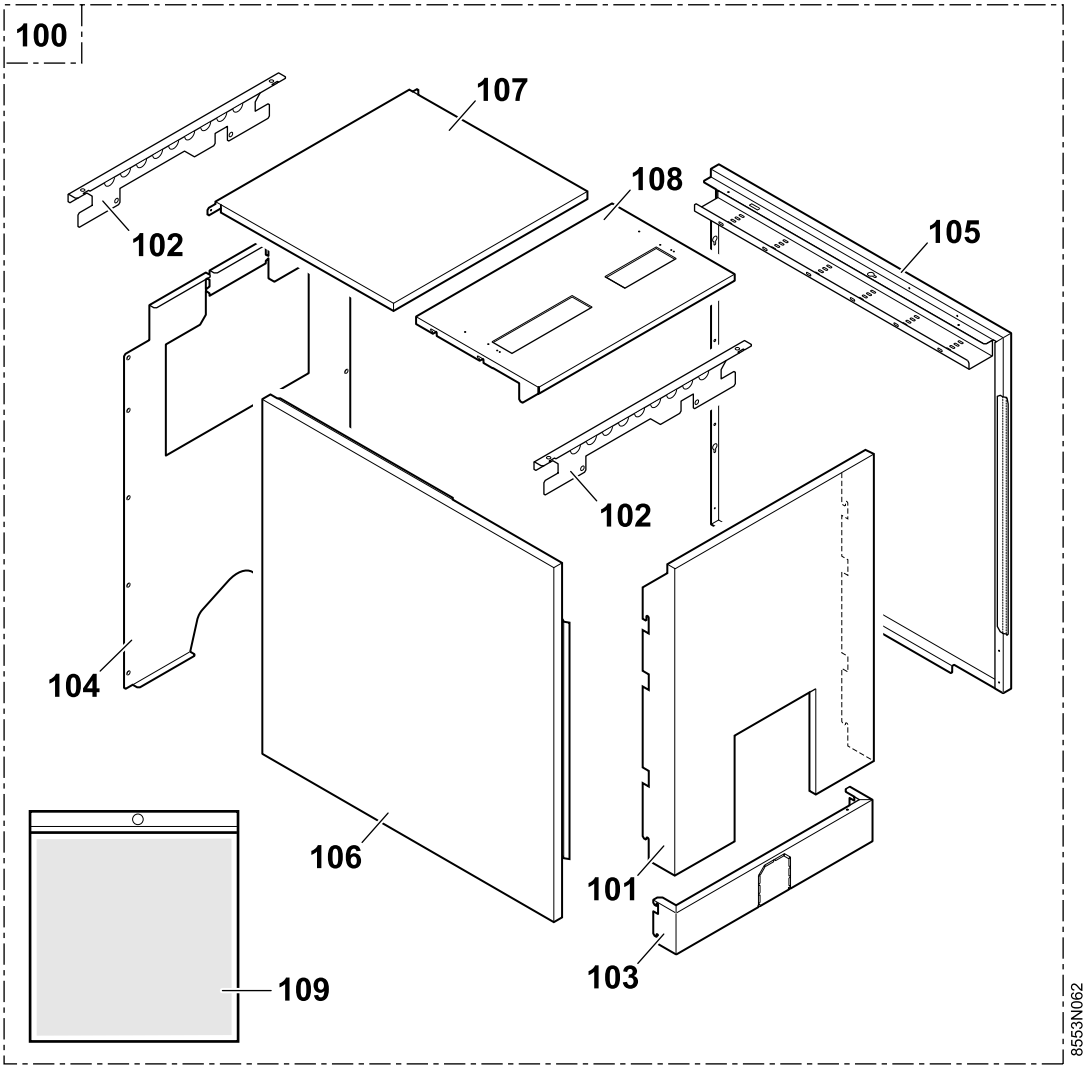

# CONTROL PANEL

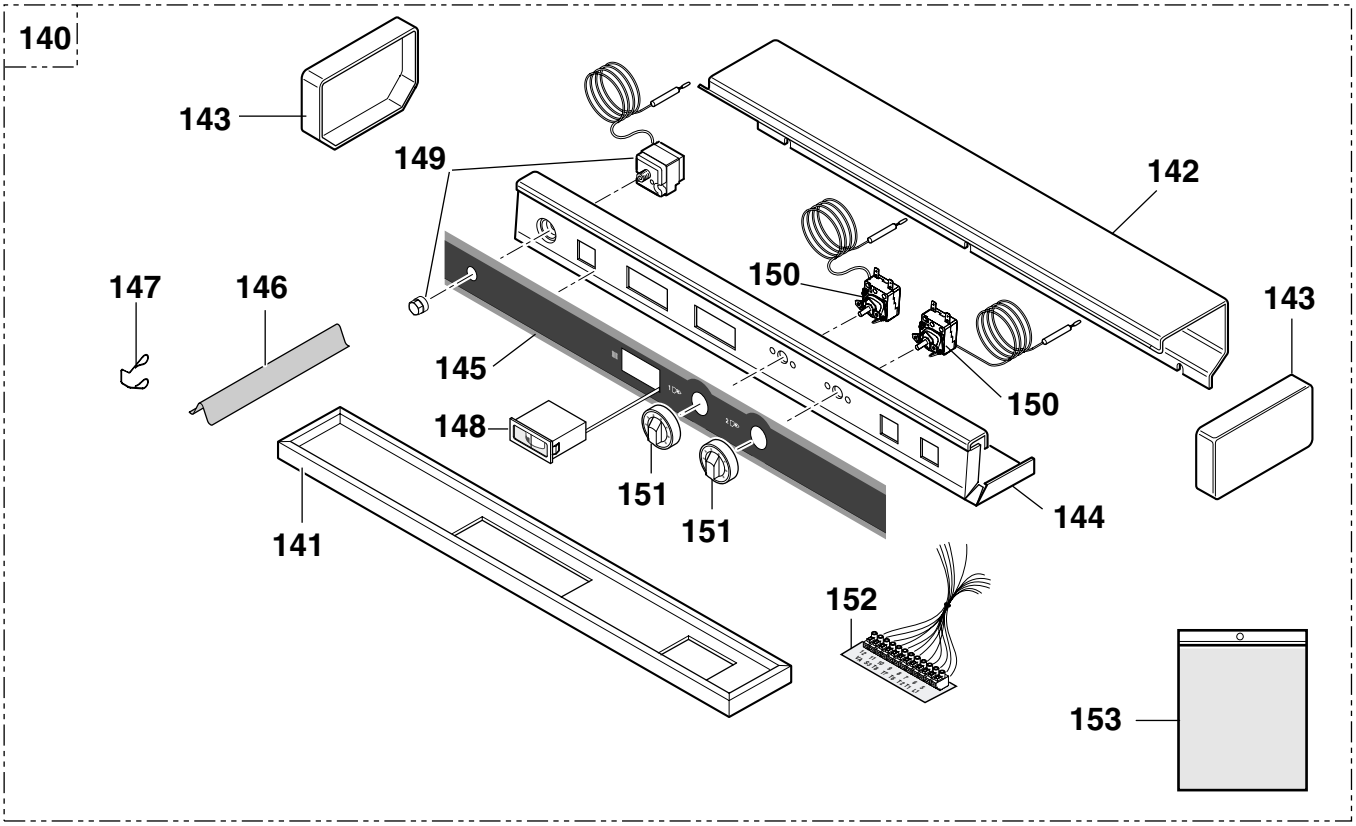


**153 :** fasteners for control panel

| Ref. | Code no. | DESCRIPTION |
|---|---|---|
| | | **BOILER BODY** |
| **1** | 8219-0032 | Complete rear section |
| **2** | 8219-8966 | Complete intermediate section |
| **3** | 8219-8976 | Complete front section |
| **4** | 8116-0571 | Nipple |
| **5** | 8219-8944 | Complete 4 section assembly rod |
| **5** | 8219-8945 | Complete 5 section assembly rod |
| **5** | 8219-8946 | Complete 6 section assembly rod |
| **5** | 8219-8947 | Complete 7 section assembly rod |
| **5** | 8219-8948 | Complete 8 section assembly rod |
| **5** | 8219-8949 | Complete 9 section assembly rod |
| **6** | 8209-0049 | $2^{1/2"}$ plug with 2 holes |
| **7** | 9536-5611 | Well |
| **8** | 8209-0048 | Plein plug |
| **10.1** | 9754-9934 | Water balancing tube GT 306 A to GT 308 A |
| **10.2** | 9754-9935 | Water balancing tube GT 309 A |
| **11.1** | 8209-8948 | $2^{1/2"}$ plug with 2 holes + well |
| **11.2** | 9536-5613 | Separator for well |
| **11.3** | 9758-1286 | Spring for well |
| **12** | 8104-8984 | Hinge |
| **13** | 8219-8916 | Complete cleaning door |
| **14** | 9425-0306 | Internal cleaning door insulation |
| **15** | 9425-0305 | External cleaning door insulation |
| **16** | 9508-6032 | Ø 10 thermocord |
| **17** | 9756-0203 | Pin for hinge |
| **18** | 8219-8913 | Complete nozzle Ø 180 - 4 to 6 sections |
| **18** | 8219-8914 | Complete nozzle Ø 200 - 7 to 9 sections |
| **19** | 8219-0206 | Right nozzle plug |
| **20** | 8219-0207 | Left nozzle plug |
| **21** | 8219-8953 | Complete burner door Ø 135 mm |
| **21** | 8219-8729 | Complete burner door Ø 190 mm |
| **22** | 9425-0303 | Internal burner door protection |
| **23** | 9425-0302 | Intermediate burner door protection |
| **24** | 9425-0301 | External burner door insulation |
| **25** | 9500-6017 | Glass for inspection window |
| **25.1** | 9501-0080 | Gaskets for inspection window |
| **26** | 9757-0027 | Inspection flange |
| **27** | 9495-0050 | 1/4" plug |
| **28** | 8219-0539 | Guide flap for burner door |
| **29** | 8219-0017 | Upper baffles length 410 mm |
| **29** | 8219-0018 | Upper baffles length 570 mm |
| **30** | 8219-0019 | Lower baffles length 412 mm |
| **30** | 8219-0020 | Lower baffles length 572 mm |
| **31** | 9601-0107 | M8-60/52 studs |

| Ref. | Code no. | DESCRIPTION |
|---|---|---|
| **31** | 9601-0260 | M12x33/26 studs |
| **31** | 9601-0302 | M12x61/57 studs |
| **32** | 8219-8957 | Bag of screws for boiler body |
| **33** | 9430-5027 | Putty for nipples |
| **34** | 9428-5095 | Silicone putty tube |
| | | **MISCELLANEOUS** |
| **50** | 9750-5025 | Brush |
| **51** | 9750-5076 | Brush rod length 1000 mm |
| **51** | 9750-5060 | Brush rod length 1300 mm |
| | | **BASE FRAME** |
| **70** | 8553-7060 | Complete base frame, 4 sections - package FD 30 |
| **70** | 8553-7061 | Complete base frame, 5 sections - package FD 31 |
| **70** | 8553-7062 | Complete base frame, 6 sections - package FD 32 |
| **70** | 8553-7063 | Complete base frame, 7 sections - package FD 33 |
| **70** | 8553-7064 | Complete base frame, 8 sections - package FD 34 |
| **70** | 8553-7065 | Complete base frame, 9 sections - package FD 35 |
| | | **INSULATING MATERIAL** |
| **90** | 8553-5507 | Complete boiler body insulation, 4 sections |
| **90** | 8553-5508 | Complete boiler body insulation, 5 sections |
| **90** | 8553-5509 | Complete boiler body insulation, 6 sections |
| **90** | 8553-5510 | Complete boiler body insulation, 7 sections |
| **90** | 8553-5511 | Complete boiler body insulation, 8 sections |
| **90** | 8553-5512 | Complete boiler body insulation, 9 sections |
| | | **CASING** |
| **100** | 8553-5500 | Complete casing, 4 sections |
| **100** | 8553-5501 | Complete casing, 5 sections |
| **100** | 8553-5502 | Complete casing, 6 sections |
| **100** | 8553-5503 | Complete casing, 7 sections |
| **100** | 8553-5504 | Complete casing, 8 sections |
| **100** | 8553-5505 | Complete casing, 9 sections |
| **101** | 8219-1000 | Insulated front panel |
| **102** | 8553-8000 | Upper fastening bracket |
| **103** | 8553-5506 | Insulated lower cover |
| **104** | 8553-8519 | Complete rear panel |
| **105** | 8553-8500 | Right-hand side panel, 4 sections |
| **105** | 8553-8501 | Right-hand side panel, 5 sections |
| **105** | 8553-8502 | Right-hand side panel, 6 sections |
| **105** | 8553-8503 | Right-hand side panel, 7 sections |
| **105** | 8553-8504 | Right-hand side panel, 8 sections |
| **105** | 8553-8505 | Right-hand side panel, 9 sections |
| **106** | 8553-8506 | Left-hand side panel, 4 sections |

| Ref. | Code no. | DESCRIPTION |
|---|---|---|
| **106** | 8553-8507 | Left-hand side panel, 5 sections |
| **106** | 8553-8508 | Left-hand side panel, 6 sections |
| **106** | 8553-8509 | Left-hand side panel, 7 sections |
| **106** | 8553-8510 | Left-hand side panel, 8 sections |
| **106** | 8553-8511 | Left-hand side panel, 9 sections |
| **107** | 8553-8512 | Rear cover, 4 sections |
| **107** | 8553-8513 | Rear cover, 5 sections |
| **107** | 8553-8514 | Rear cover, 6 sections |
| **107** | 8553-8515 | Rear cover, 7 sections |
| **107** | 8553-8516 | Rear cover, 8 sections |
| **107** | 8553-8517 | Rear cover, 9 sections |
| **108** | 8553-8518 | Complete front cover |
| **109** | 8553-8520 | Bag of casing fasteners |

| | | **CONTROL PANEL (FA 122)** |
|---|---|---|
| **140** | 8555-7377 | Complete control panel |
| **141** | 8219-0508 | Base for control panel |
| **142** | 8219-0502 | Top cover for control panel |
| **143** | 9755-0143 | Side cover |
| **144** | 8555-8905 | Front cover |
| **145** | 9421-0718 | Control strip |
| **146** | 9536-5613 | Separator for well |
| **147** | 9758-1286 | Spring for well |
| **148** | 9536-5155 | Thermometer |
| **149** | 9536-5605 | Safety thermometer |
| **150** | 9536-5604 | Thermostat |
| **151** | 8219-5508 | Setting button with pins |
| **152** | 8555-4910 | Electrical circuit |
| **153** | 8555-5500 | Fasteners for control panel |

# GT 300 A/II

## Fuel oil/gas hot water boiler

English
02/12/07

Warning/Caution:
Label all wiring prior to disconnection for servicing controls. Wiring errors can cause improper and dangerous operation.

"Verify Proper Operation After Serving"

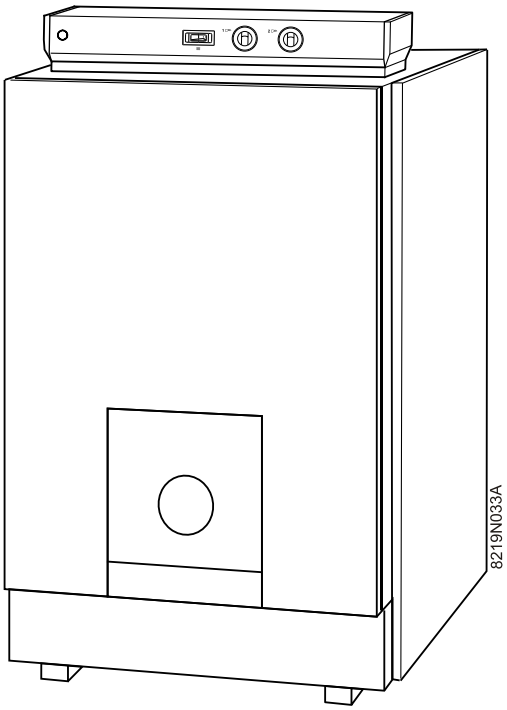


# Assembly instructions - Please read these instructions & retain for future reference

De Dietrich

85534259 D 94863881

# Installation codes

The boiler shall be assembled and installed by a qualified professional only. Strict compliance with these installation and operating instructions is a precondition for the correct and guarantee of the boiler.

The installation must conform to the requirements of the authority having juristriction or, in the absence of such requirements, to the CAN/CGA B-149 fuel gas installation codes and CSA B-139 oil installation codes.

Where required by the authority having juristriction, the installation must conform to the standard for controls and safety devices for automatically fired boilers ANSI/ASME CSD-1.

The installation of the relief valve shall be consistent with ANSI/ASME boiler pressure vessel code, section 1V CSA B51.

The boiler must not be installed on carpeting.

If an external electrical source is utilized, the boiler when installed, must be electrically bonded to ground in accordance with the requirements of the authority having juristriction or, in the absence of such requirements, with the canadian electrical code part 1.CSA C22.1 electrical code.

**Label all wires prior to disconnection when servicing controls. Wiring can cause improper operation after servicings. Verify proper operation after service.**

# Packing

**For Canada**:

BOILER PACKAGED CONTENTS INCLUDED:

- Installation and operating instructions
- Assembly instructions
- Tube(s) of silicone #9428-5095
- Can(s) of lubricant # 9430-5027
- Assembly tools # 8801-7000/7005

**Packing :** Before assembling the boiler, check with the chart below to make sure that you have all the component packages.

**1.** Technical documents package

| GT | 304 A/II | 305 A/II | 306 A/II | 307 A/II | 308 A/II | 309 A/II |
|---|---|---|---|---|---|---|
| 1 Package (United States) | FD 115 | FD 116 | FD 117 | FD 118 | FD 119 | FD 120 |
| 1 Package (Canada) | FD 109 | FD 110 | FD 111 | FD 112 | FD 113 | FD 114 |

**2. Boiler body + Accessories**

**- Boilers supplied with an assembled body (Begin at figure 15)**

| GT | | 304 A/II | 305 A/II | 306 A/II | 307 A/II | 308 A/II | 309 A/II |
|---|---|---|---|---|---|---|---|
| Assembled boiler body (contents depend upon model) | | 1 | 1 | 1 | 1 | 1 | 1 |
| Accessories | Package | FD 133 | FD 133 | FD 134 | FD 135 | FD 135 | FD 136 |

- **Boilers supplied with an unassembled body**

| GT | | 304 A/II | 305 A/II | 306 A/II | 307 A/II | 308 A/II | 309 A/II |
|---|---|---|---|---|---|---|---|
| Front section | Package **8219-0031** | 1 | 1 | 1 | 1 | 1 | 1 |
| Intermediate section | Package **8219-0030** | 2 | 3 | 4 | 5 | 6 | 7 |
| Rear section | Package **8219-0032** | 1 | 1 | 1 | 1 | 1 | 1 |
| Assembly rod pack | | 1 | 1 | 1 | 1 | 1 | 1 |
| Body accessories | 1 Package | FD 127 | FD 128 | FD 129 | FD 130 | FD 131 | FD 132 |
| Base frame | 1 Package | FD 30 | FD 31 | FD 32 | FD 33 | FD 34 | FD 35 |

**3.** Burner door

| GT | | 304 A/II | 305 A/II | 306 A/II | 307 A/II | 308 A/II | 309 A/II |
|---|---|---|---|---|---|---|---|
| Burner door | 1 Package | BP 114 | BP 114 | BP 114 | BP 114 | BP 114 | BP 114 |

**4.** Baffle plates

| GT | | 304 A/II | 305 A/II | 306 A/II | 307 A/II | 308 A/II | 309 A/II |
|---|---|---|---|---|---|---|---|
| Baffle plates | 1 Package | BP 16 | BP 17 | BP 17 | BP 19 | BP 20 | BP 21 |

**5.** Casing: The base frame insulation delivered in this package is not required (already fixed on).

| GT | | 304 A/II | 305 A/II | 306 A/II | 307 A/II | 308 A/II | 309 A/II |
|---|---|---|---|---|---|---|---|
| United States | 1 Package | FD 182 | FD 183 | FD 184 | FD 185 | FD 186 | FD 187 |
| Canada | 1 Package | FD 1 | FD 2 | FD 3 | FD 4 | FD 5 | FD 6 |

**6.** Control panel

| GT | | 304 A/II | 305 A/II | 306 A/II | 307 A/II | 308 A/II | 309 A/II |
|---|---|---|---|---|---|---|---|
| Standard control panel | Package | FA 122 | FA 122 | FA 122 | FA 122 | FA 122 | FA 122 |

*i* For the optional equipment you may use with this boiler, see the current price list.

## Tools required

- Tube of silicon caurk
- Side cutter (for cutting thermocord)
- Wire brush (for cleaning section openings): use of a *1" fitting brush attached to cordless saves time.
- Sand cloth (for cleaning nipples): Using a power brush saves time.
- Solvent
- Wooden or rubber mallet
- Tightness sealant: See step 28

THESE TOOLS ARE IN ADDITION TO YOUR NORMAL TOOL REQUIREMENTS.

some spare screws are provided.

**Warning : the order of assembly is given by the numbers of the various figures.**

## Symbols used

| | | |
|---|---|---|
| | Caution danger | Risk of injury and damage to equipment. Attention must be paid to the warnings on safety of persons and equipment |
| | Specific information | Information must be kept in mind to maintain comfort |
| | Reference | Refer to another manual or other pages in this instruction manual |

## 1

### FD30 - FD31 - FD32 - FD33 - FD34 - FD35

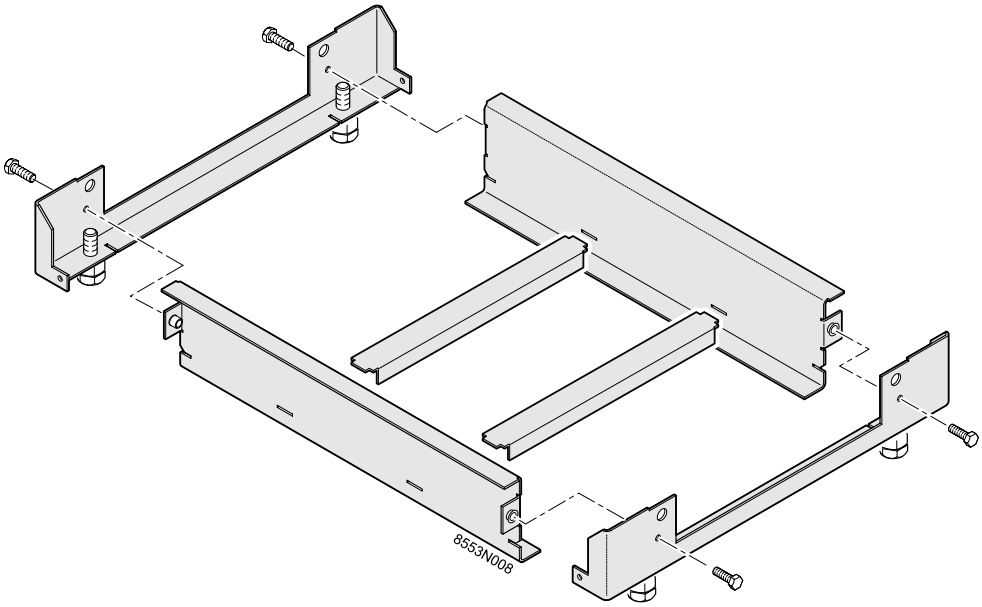


## 2

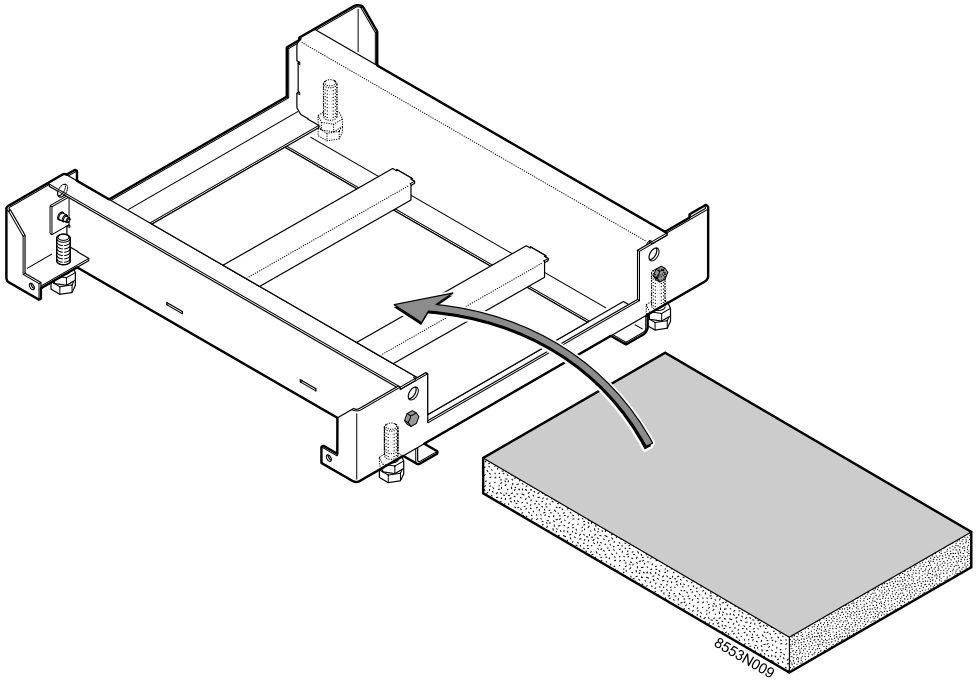

## 3

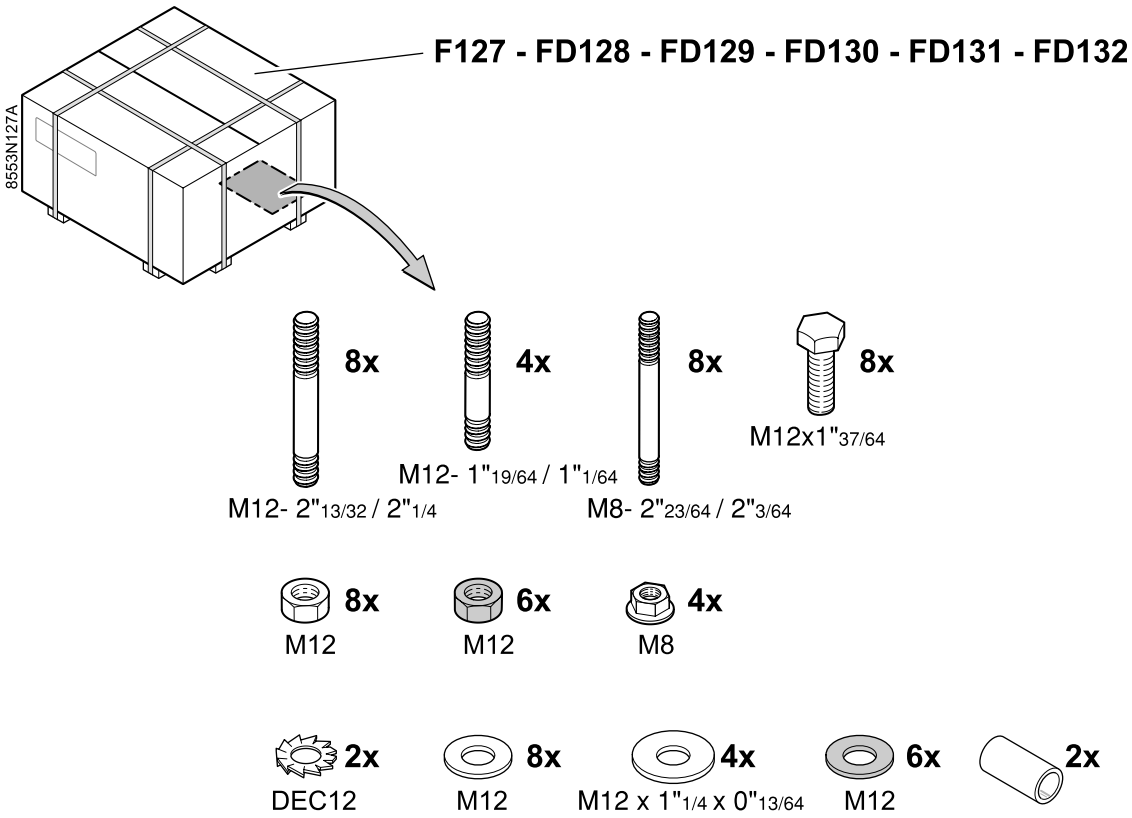
F127 - FD128 - FD129 - FD130 - FD131 - FD132
8553N127A
8x
M12- 2"13/32 / 2"1/4
4x
M12- 1"19/64 / 1"1/64
8x
M8- 2"23/64 / 2"3/64
8x
M12x1"37/64
8x
M12
6x
M12
4x
M8
2x
DEC12
8x
M12
4x
M12 x 1"1/4 x 0"13/64
6x
M12
2x

## 4

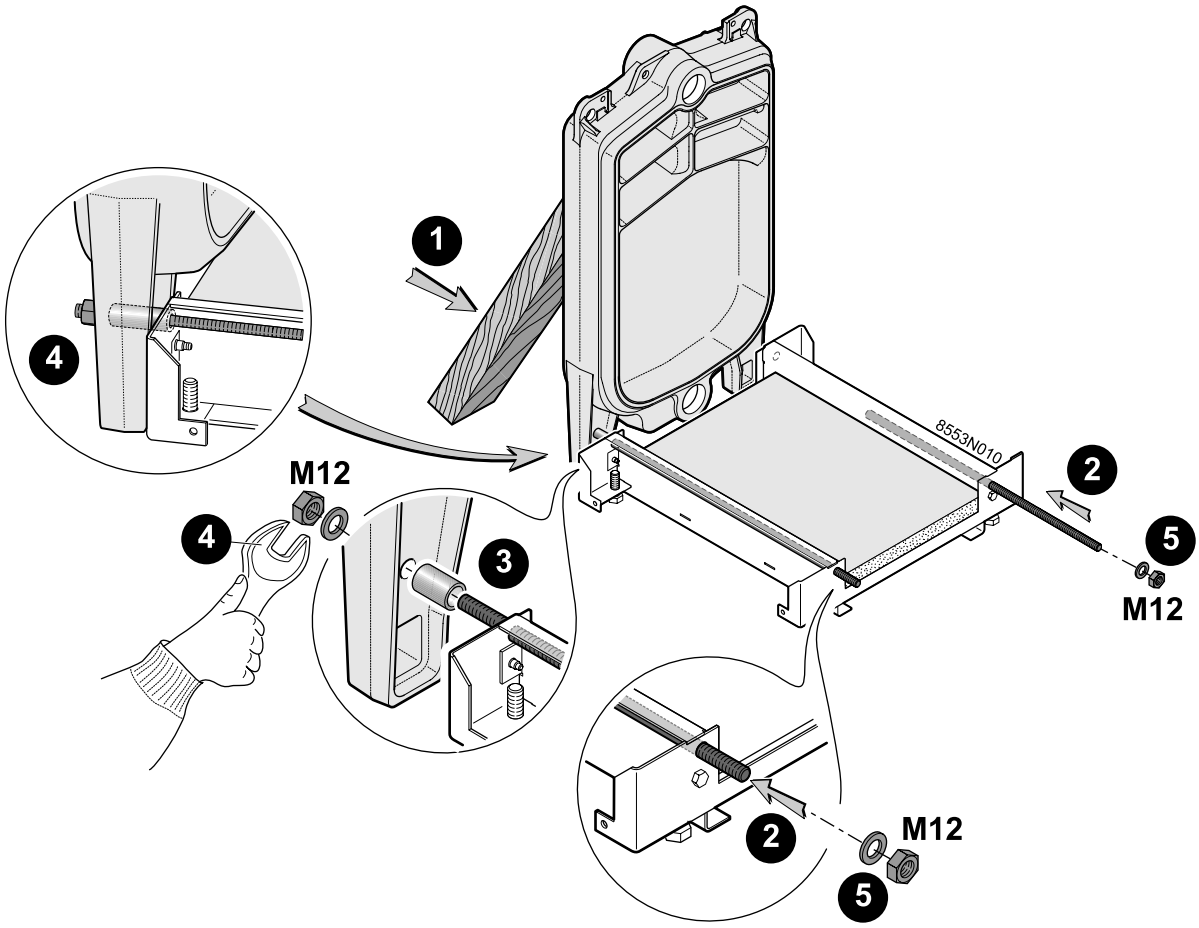
1
4
M12
4
3
8553N010
2
5
M12
2
M12
5

## 5

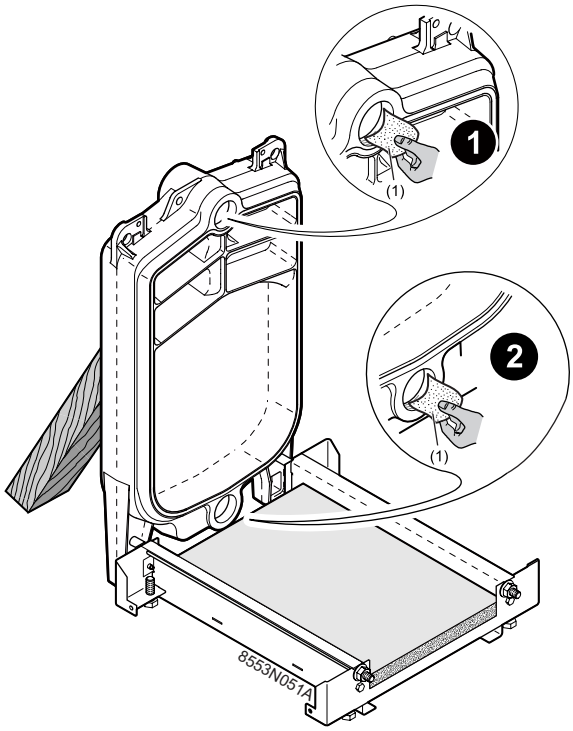


(1) Glasspaper

## 6

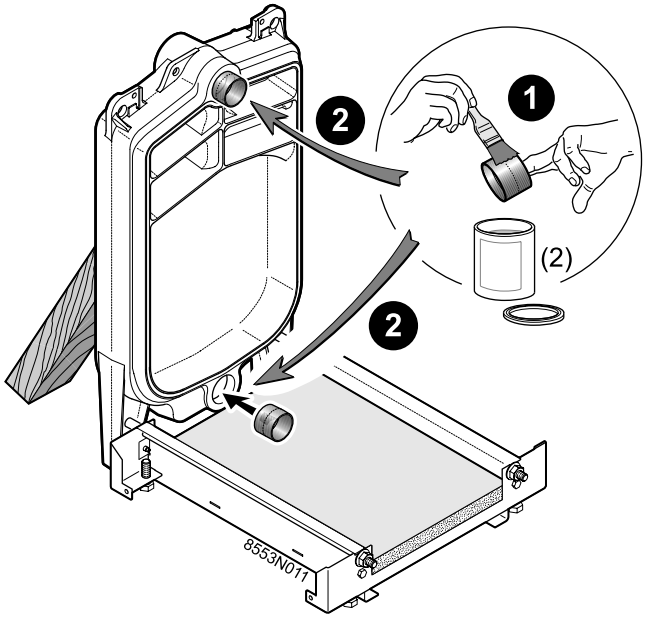


(2) Lubricant (supplied)

## 7

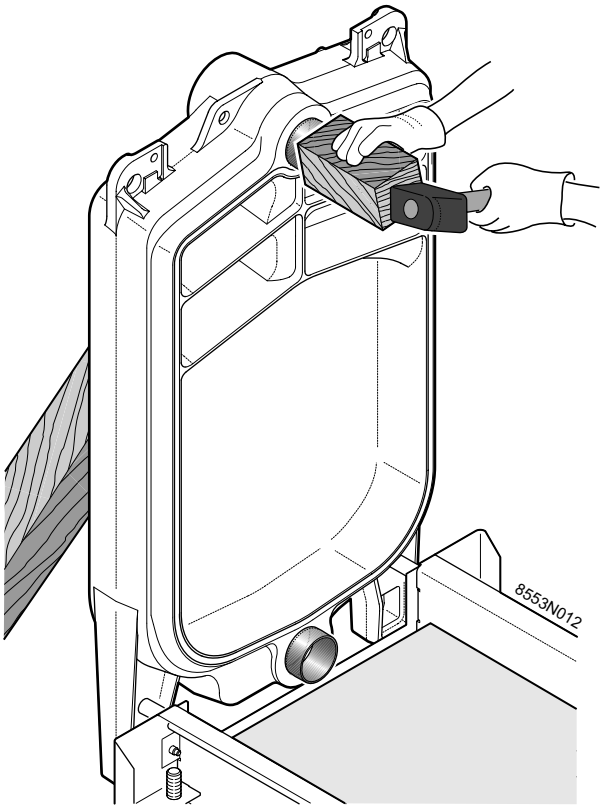


## 8

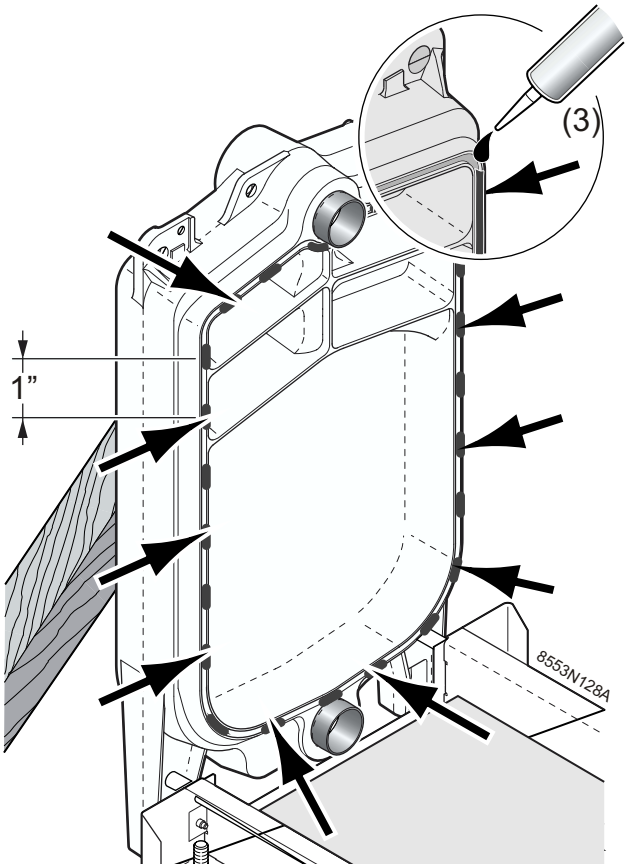


(3) Tube of silicon caurk (provided)

## 9

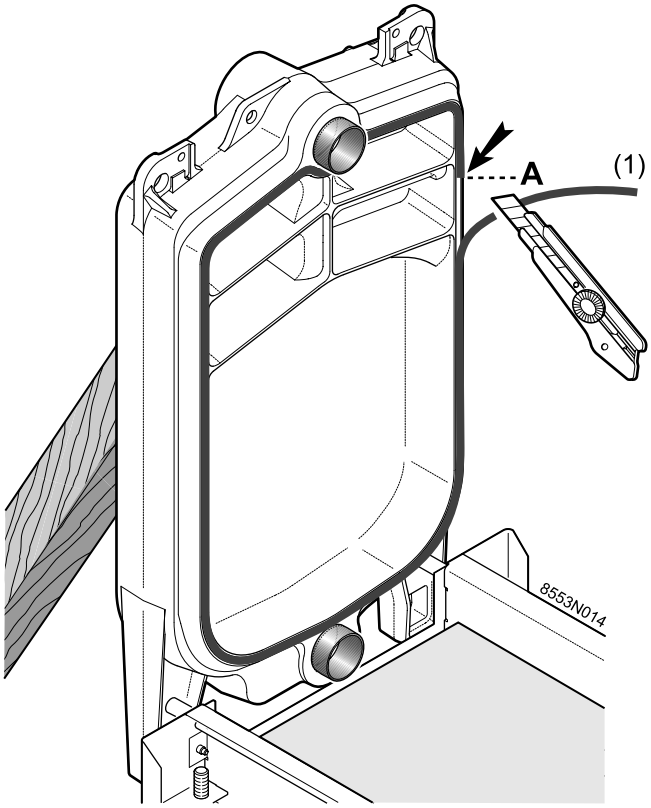


(1) Thermocord

## 10

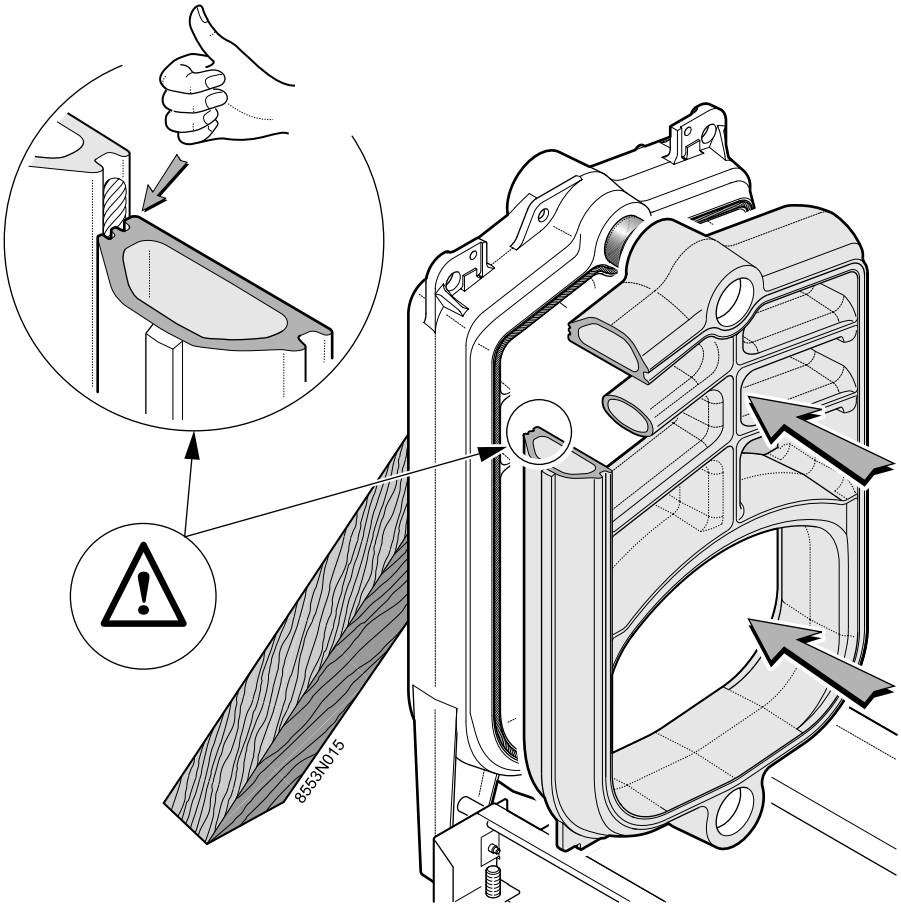

## 11

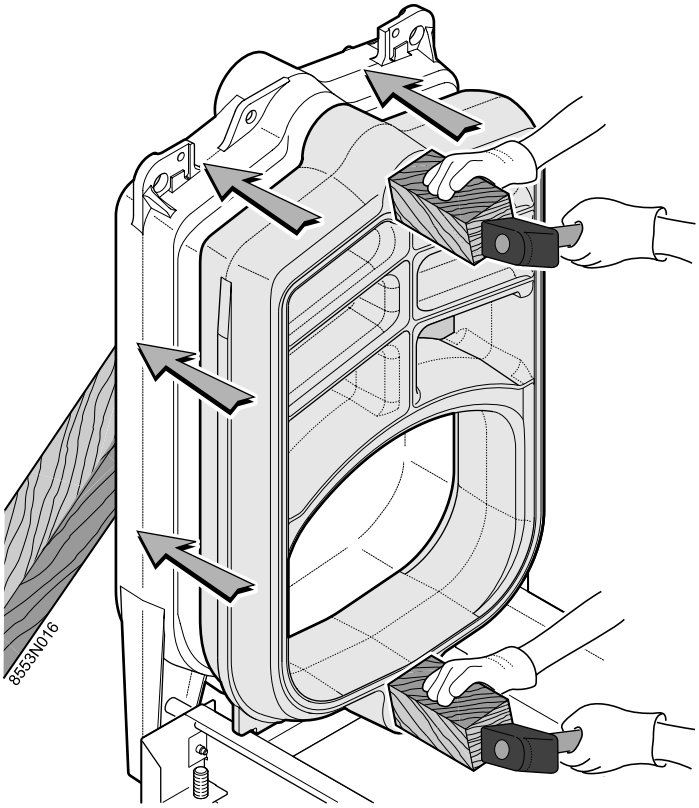


## 12

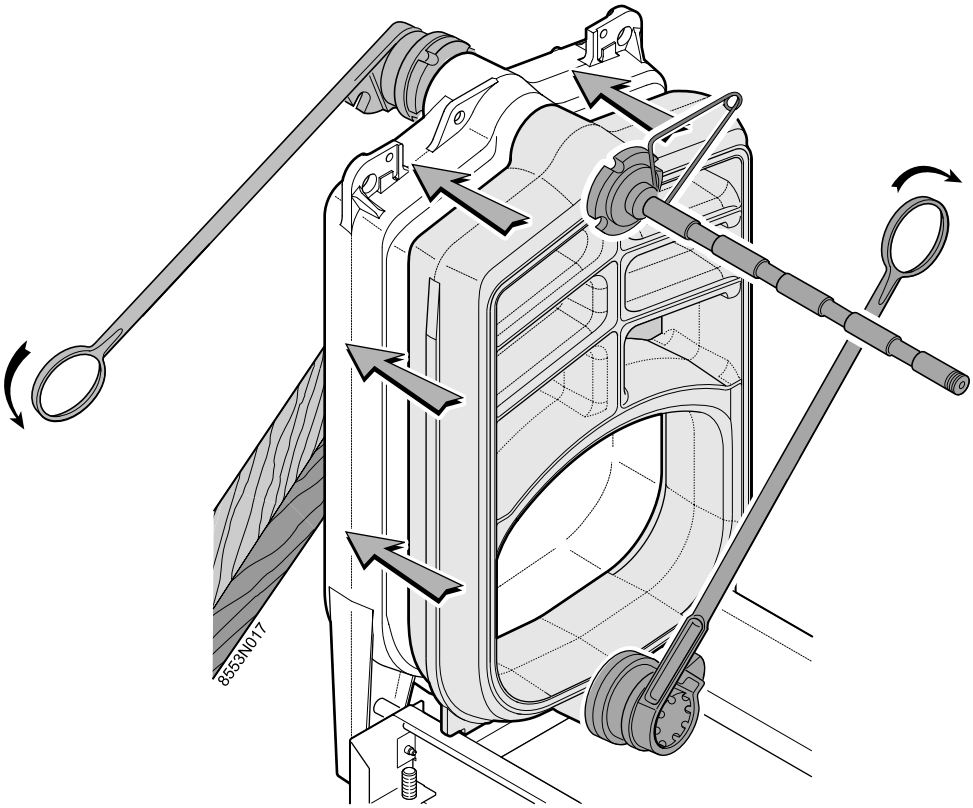

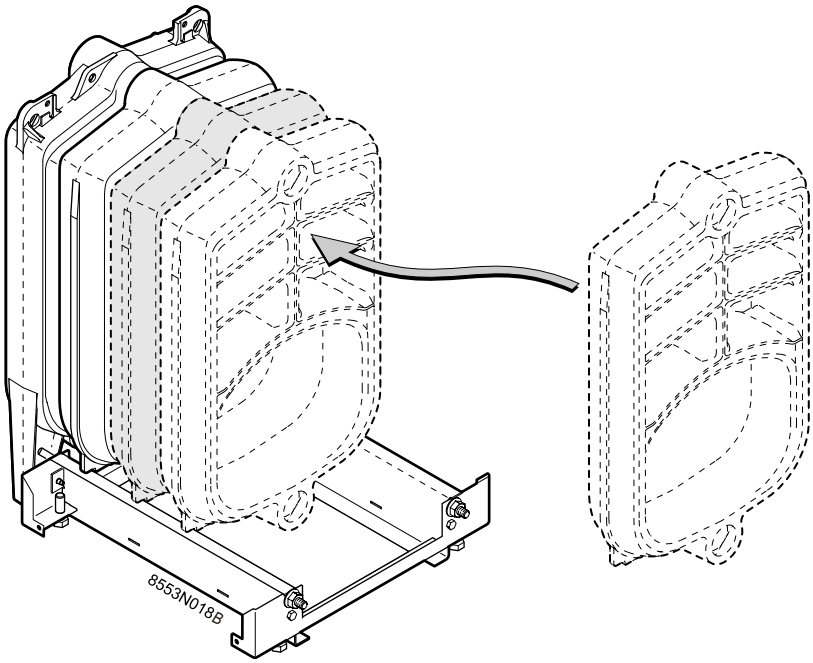


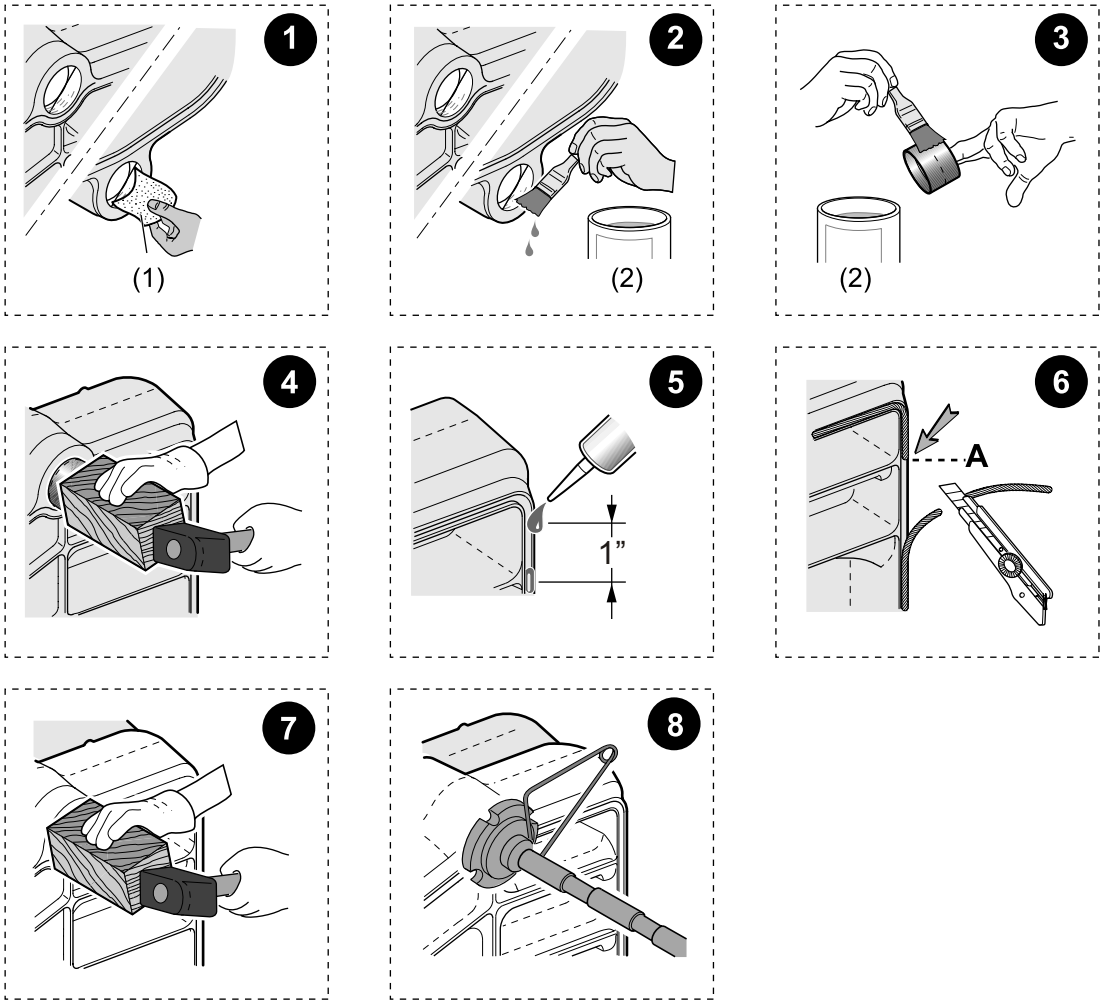


(1) Glasspaper
(2) Lubricant (supplied)

## 14

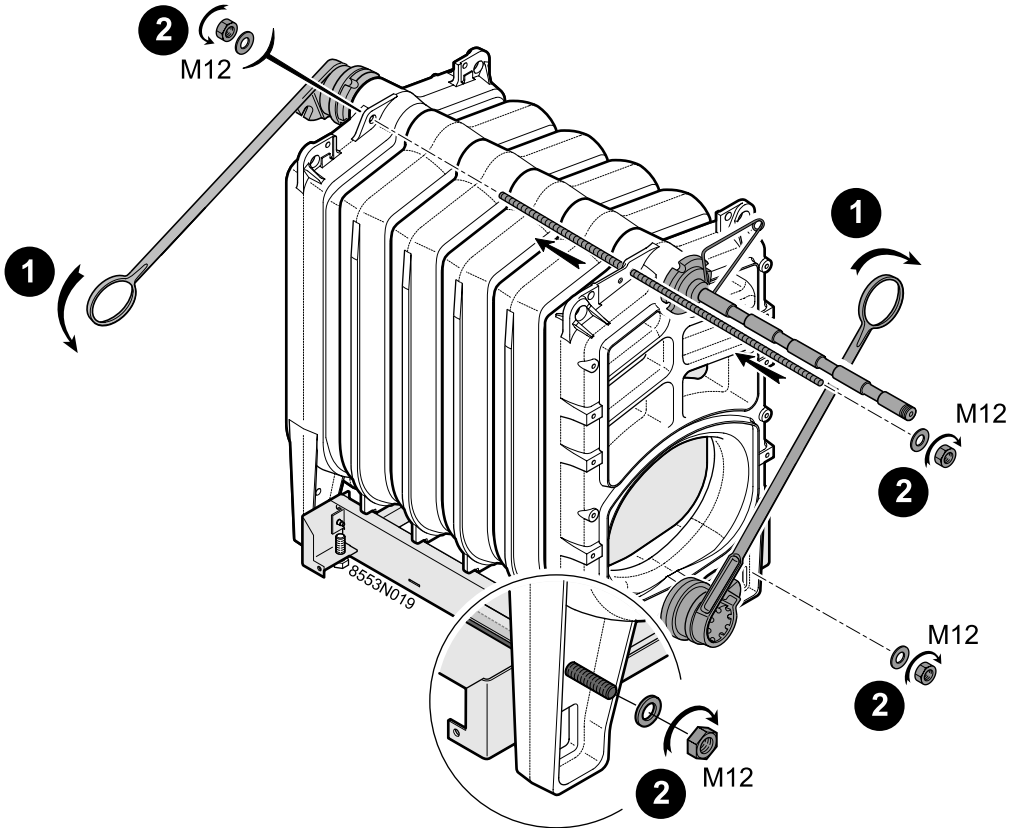


## 15

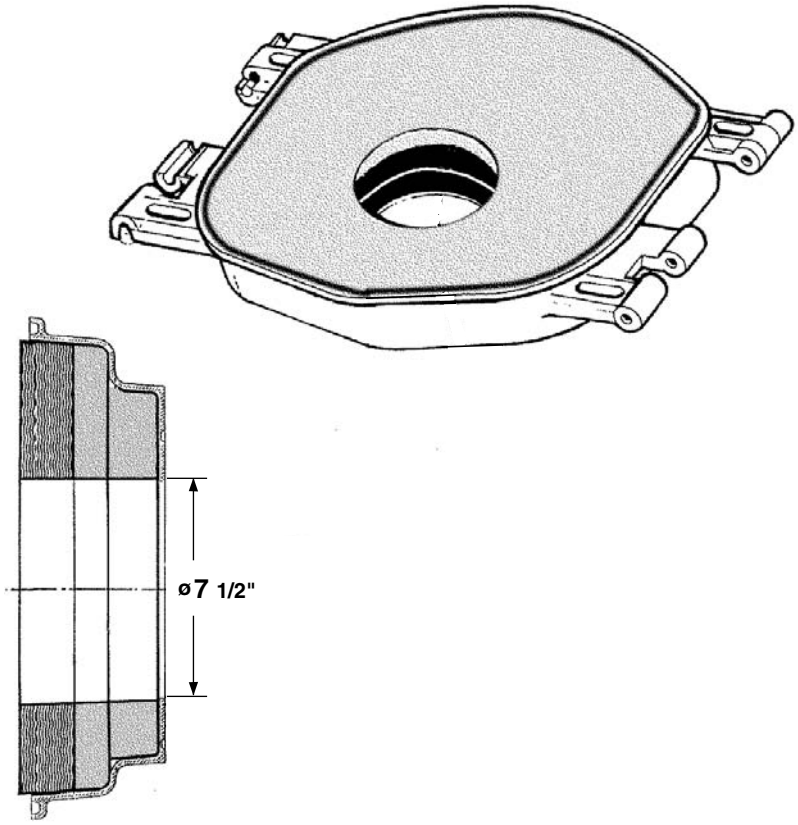


Adjust the thermal insulation to match the burner.

## 16

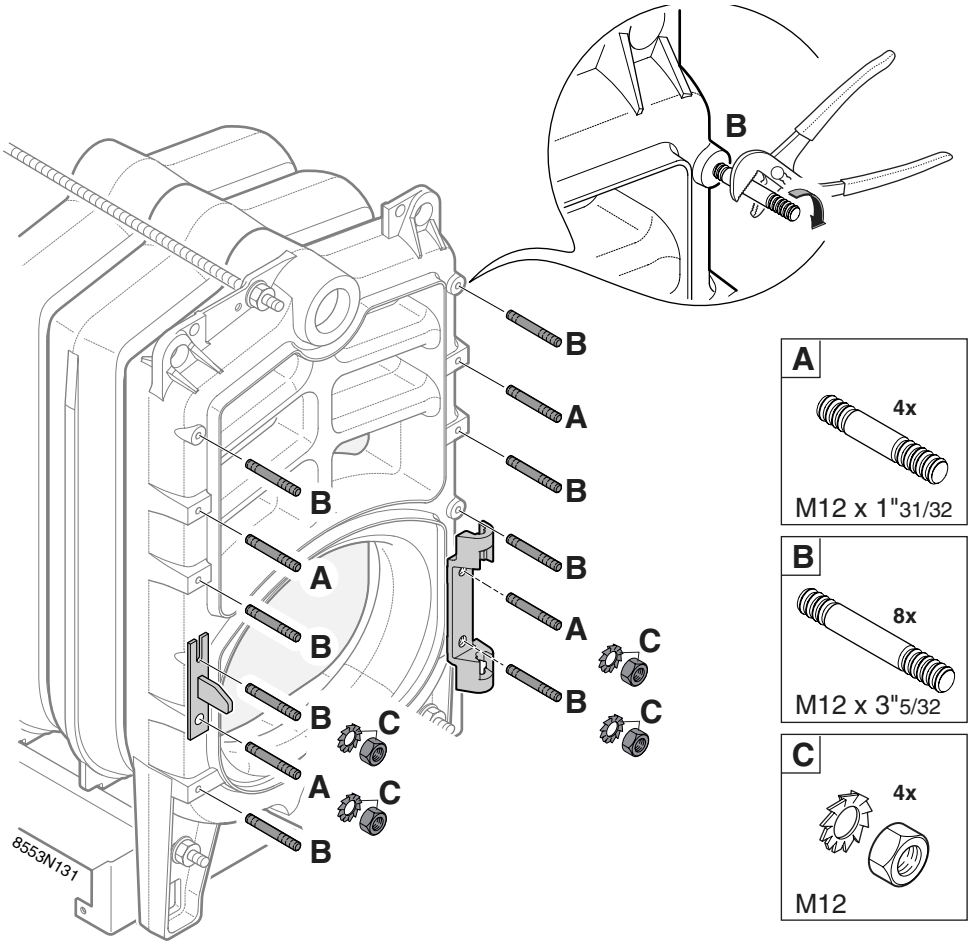
B
B
A
B
B
A
B
B
A
B
B
A
B
C
C
C
A
4x
M12 x 1"31/32
B
8x
M12 x 3"5/32
C
4x
M12
8553N131

## 17

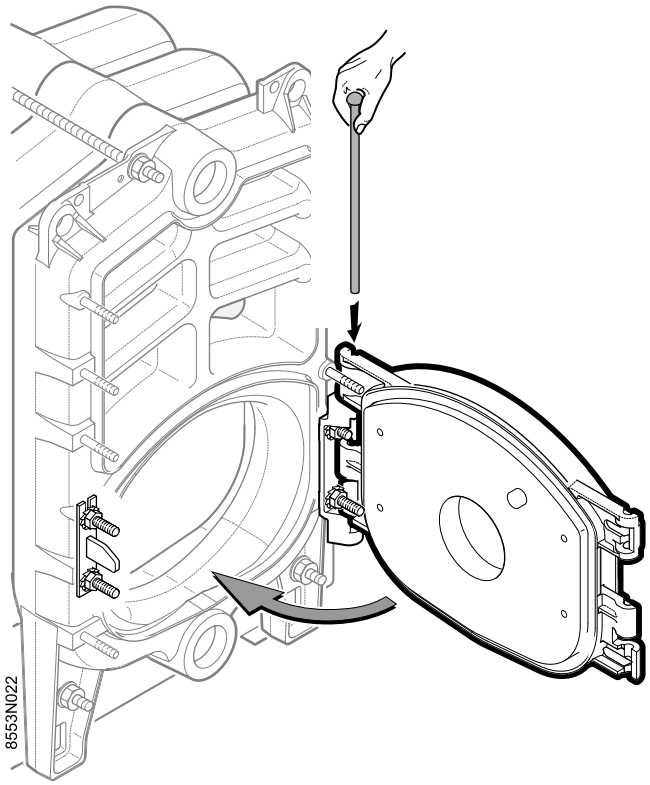
8553N022

## 18

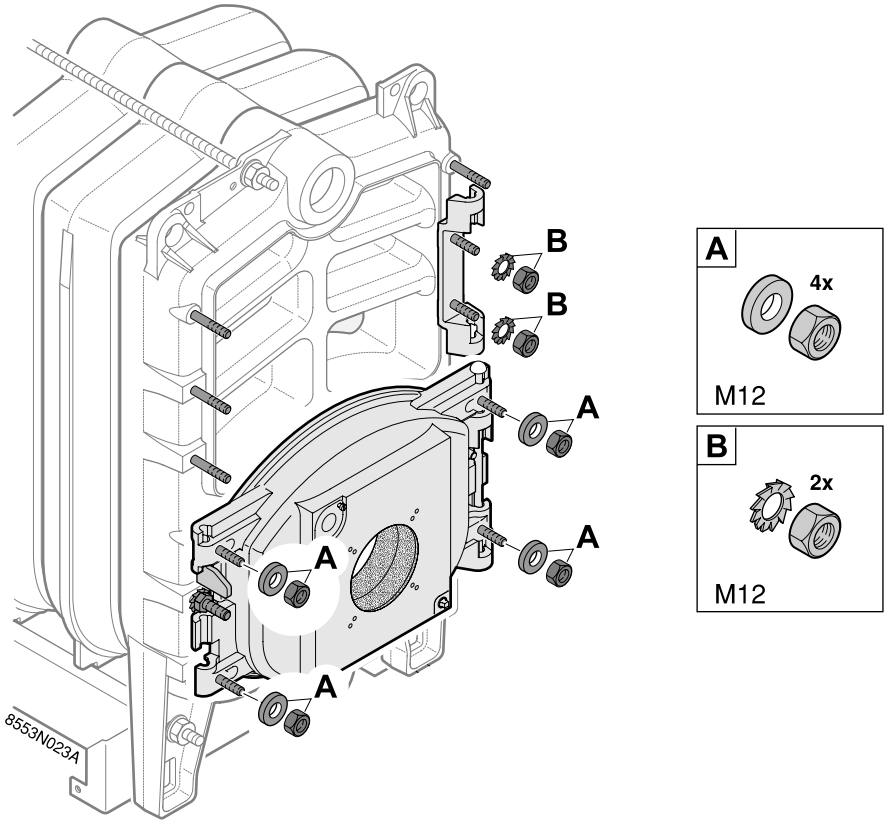


## 19

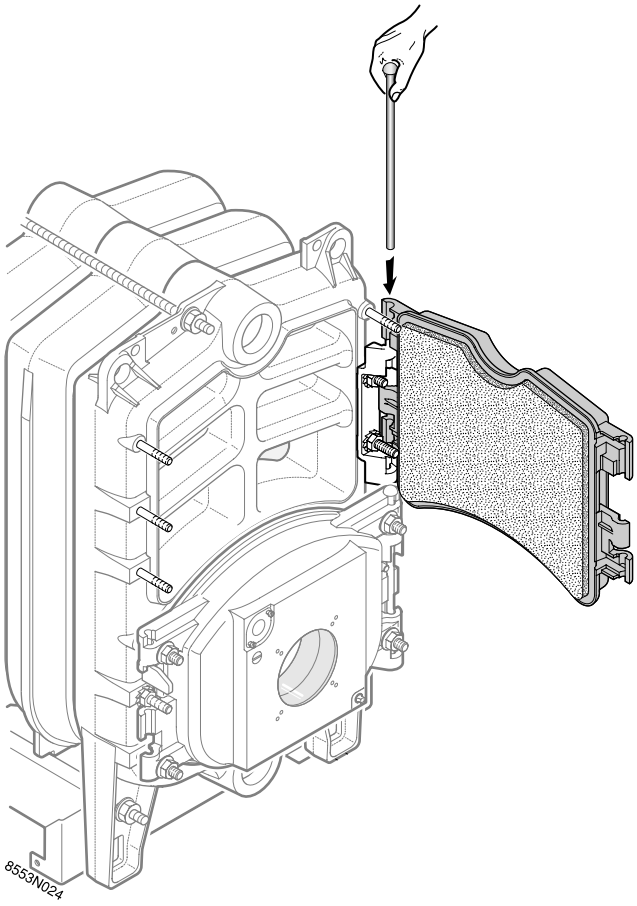

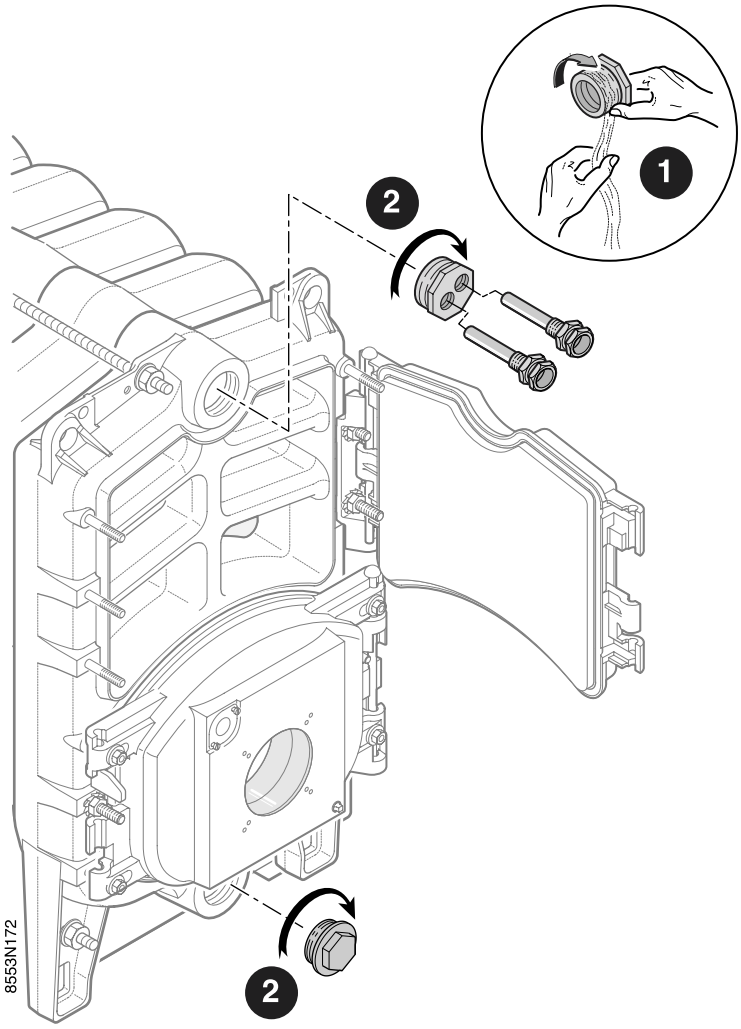


Desludging unit connection

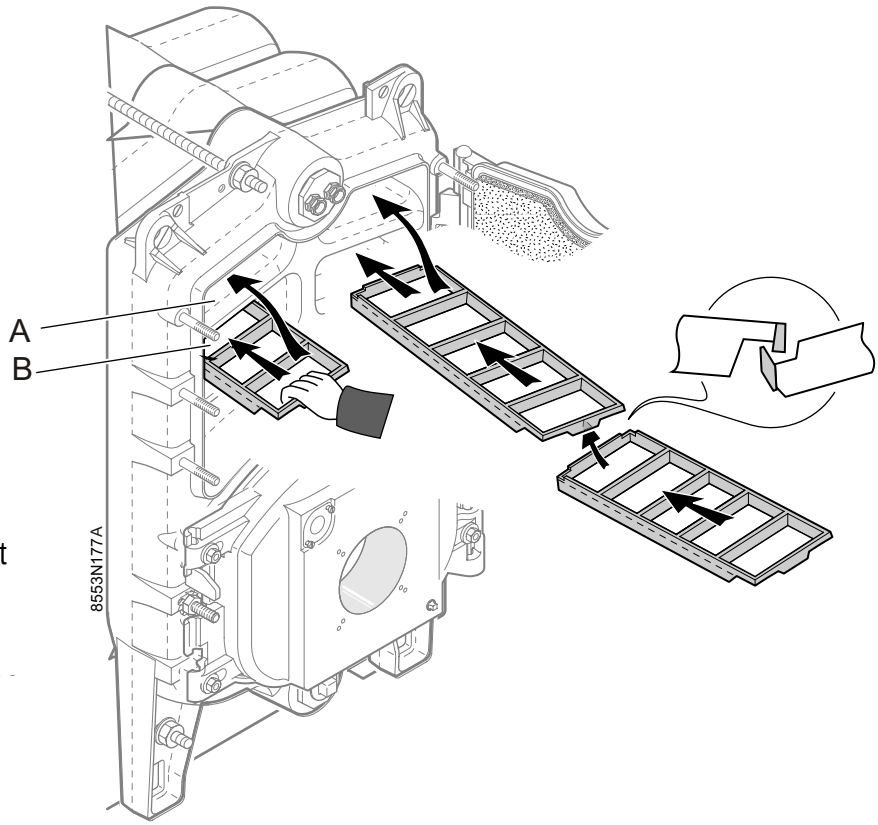


Combustion air supply must be provided according to national and local codes:

| Baffle Position | Baffle | Fraction | mm | GT 304 A/II | GT 305 A/II | GT 306 A/II | GT 307 A/II | GT 308 A/II | GT 309 A/II |
|---|---|---|---|---|---|---|---|---|---|
| Upper [3rd Pass] | 8219-0017 | 16 1/4 | 410 | 0 | 8 | 8 | 4 | 0 | 0 |
| Middle [2nd Pass] | 8219-0018 | 22 7/16 | 570 | 4 | 0 | 0 | 4 | 8 | 8 |
| Lower [1st Pass] | 8219-0019 | 16 1/4 | 412 | 2 | 2 | 2 | 2 | 4 | 2 |
| | 8219-0020 | 22 1/2 | 572 | 0 | 0 | 0 | 0 | 0 | 2 |

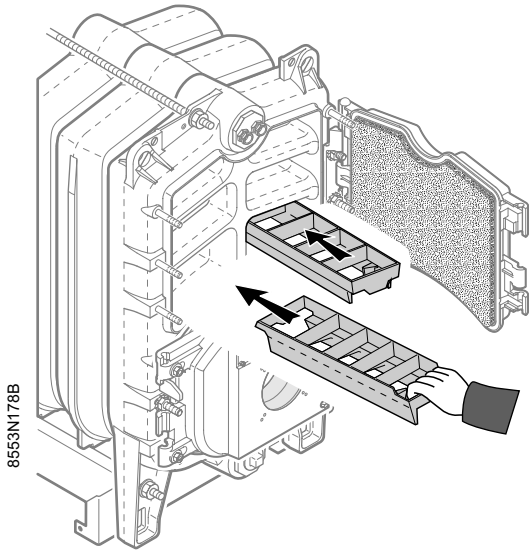


Illustration above showing minimum distances to combustible materials and servicing.

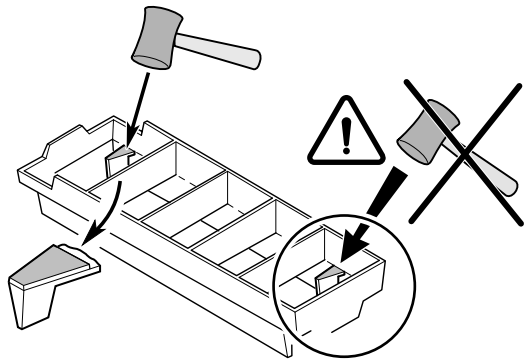

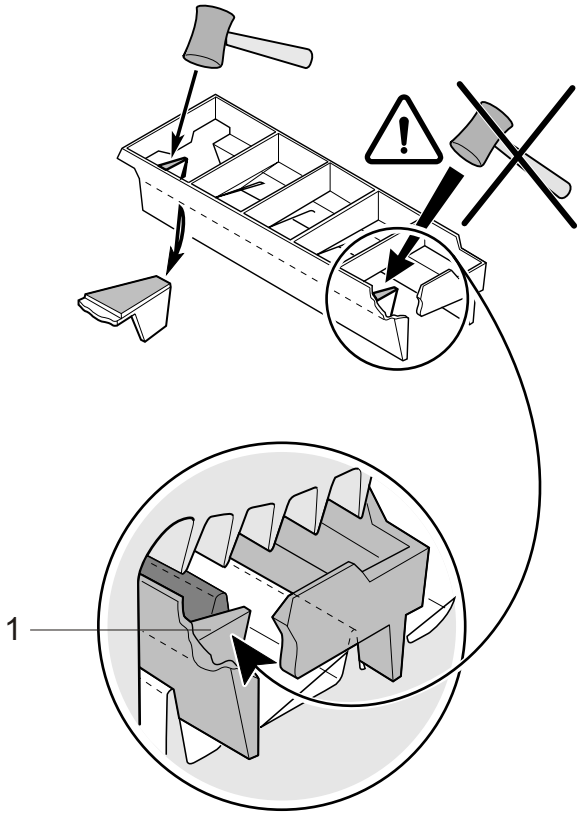


## 1: Stop pin

| Baffle Position | Baffle | Fraction | mm | GT 304 A/II | GT 305 A/II | GT 306 A/II | GT 307 A/II | GT 308 A/II | GT 309 A/II |
|---|---|---|---|---|---|---|---|---|---|
| Upper [3rd Pass] | 8219-0017 | 16 1/4 | 410 | 0 | 8 | 8 | 4 | 0 | 0 |
| Middle [2nd Pass] | 8219-0018 | 22 7/16 | 570 | 4 | 0 | 0 | 4 | 8 | 8 |
| Lower [1st Pass] | 8219-0019 | 16 1/4 | 412 | 2 | 2 | 2 | 2 | 4 | 2 |
| | 8219-0020 | 22 1/2 | 572 | 0 | 0 | 0 | 0 | 0 | 2 |

## 23

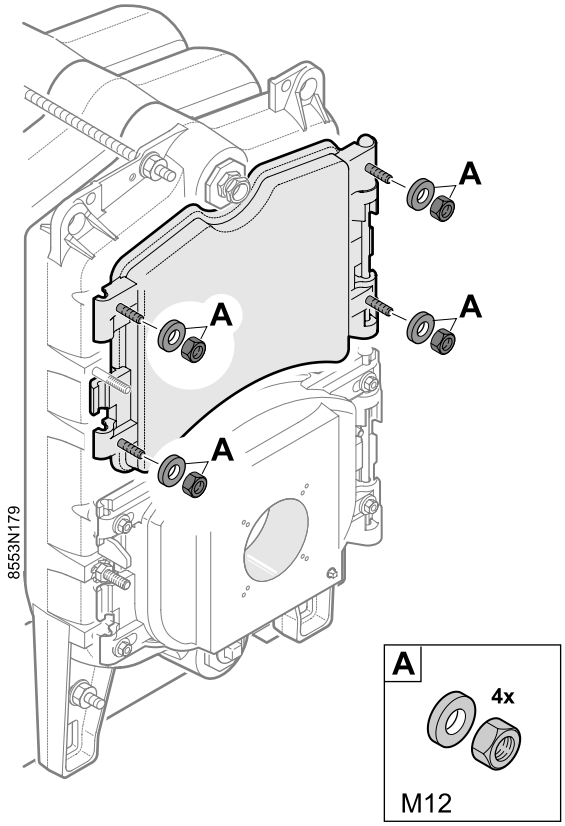


## 24

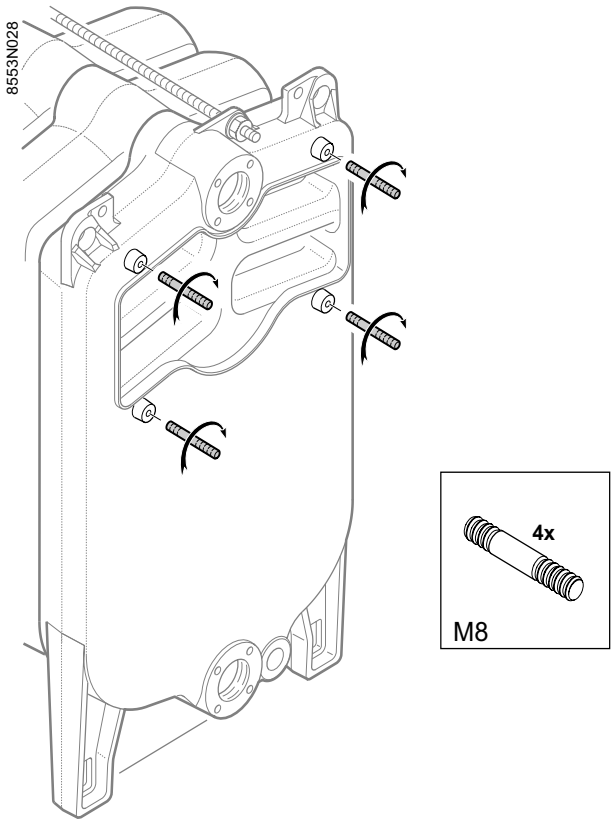

## 25

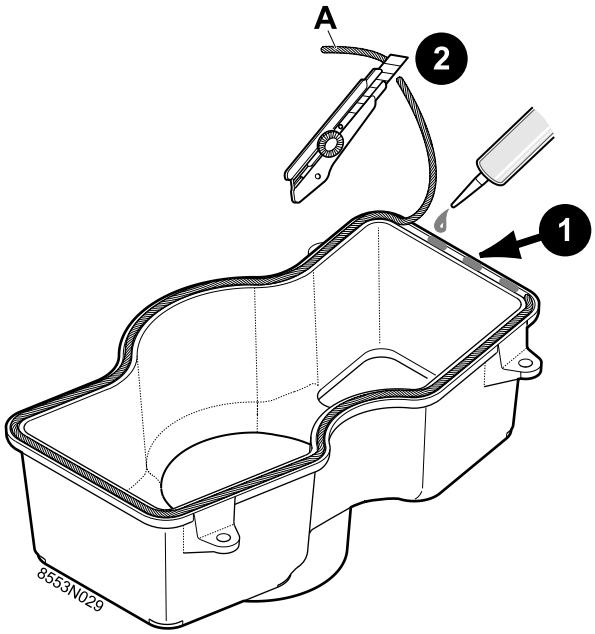


(A) Thermocord

## 26

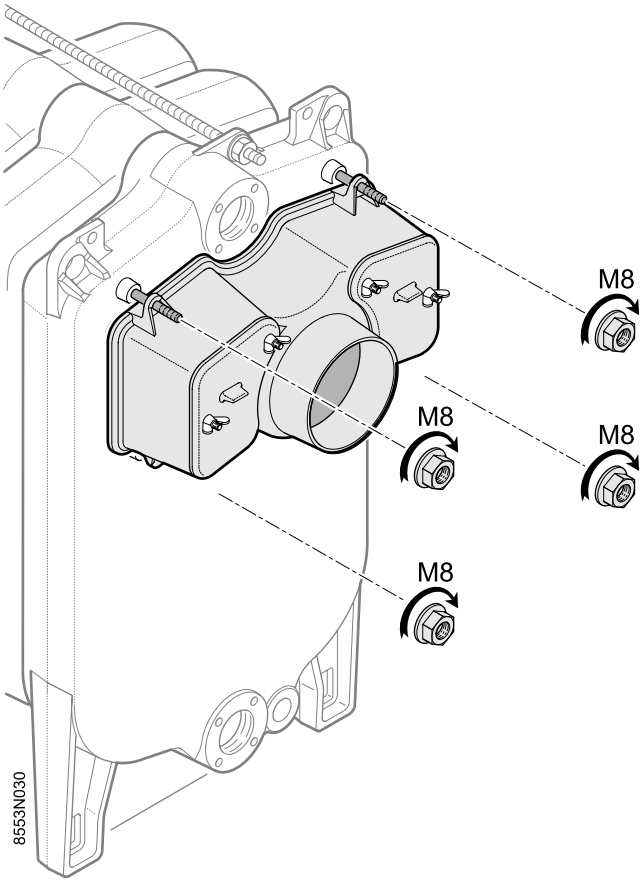

# 27 Hydraulic test

For USA: After assembling the boiler body, the installer must carry out a water tightness test at a pressure equal to 1.5 times the operating pressure (that is 108 PSI minimum) for 10 minutes at least.
The test must be done at room temperature.

For Canada: After assembling the boiler body, the installer must carry out a water tightness test at a pressure equal to 1.5 times the operating pressure (that is 81* PSI minimum) for 30 minutes at least.
The test must be done at room temperature.

*: 59 PSI minimum in Alberta.

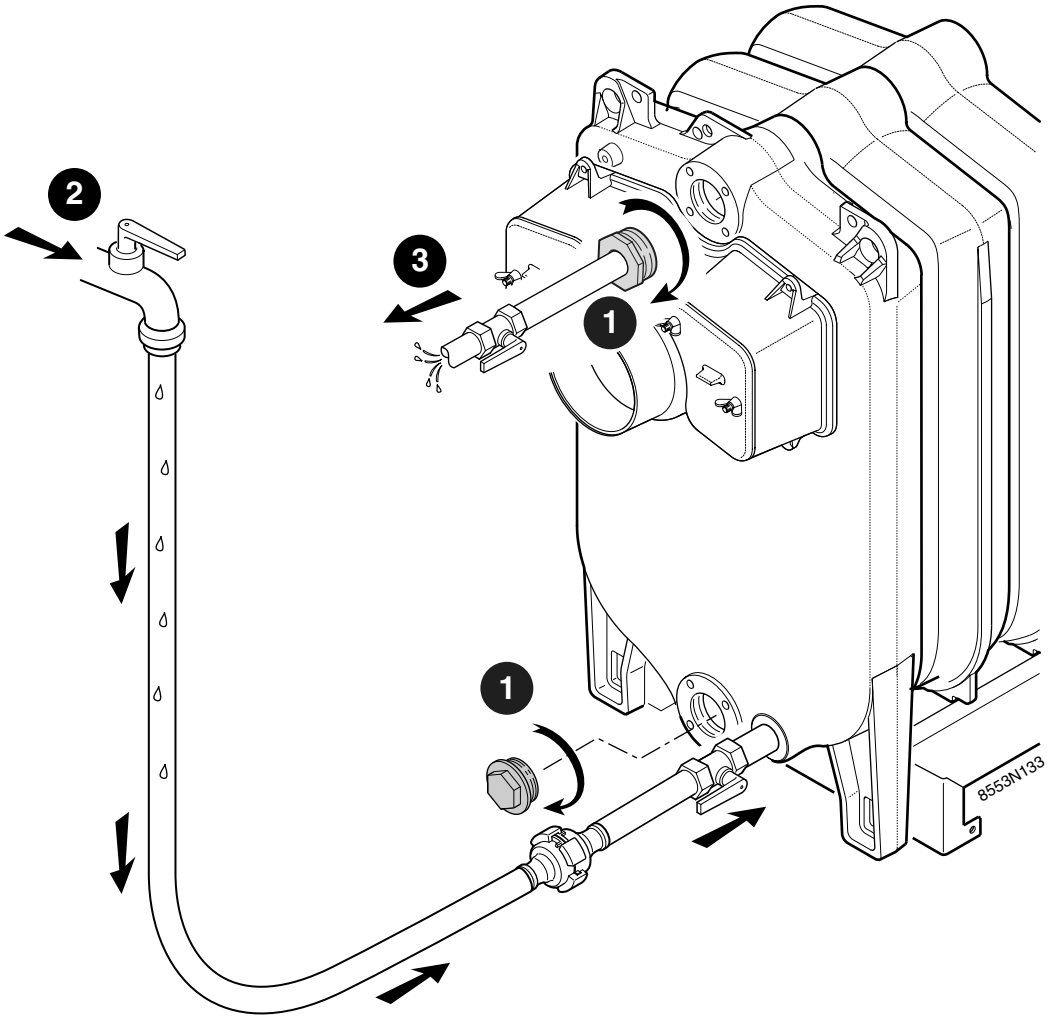


**Ensure that all the air in the boiler is vented to avoid any bursting of the body.**

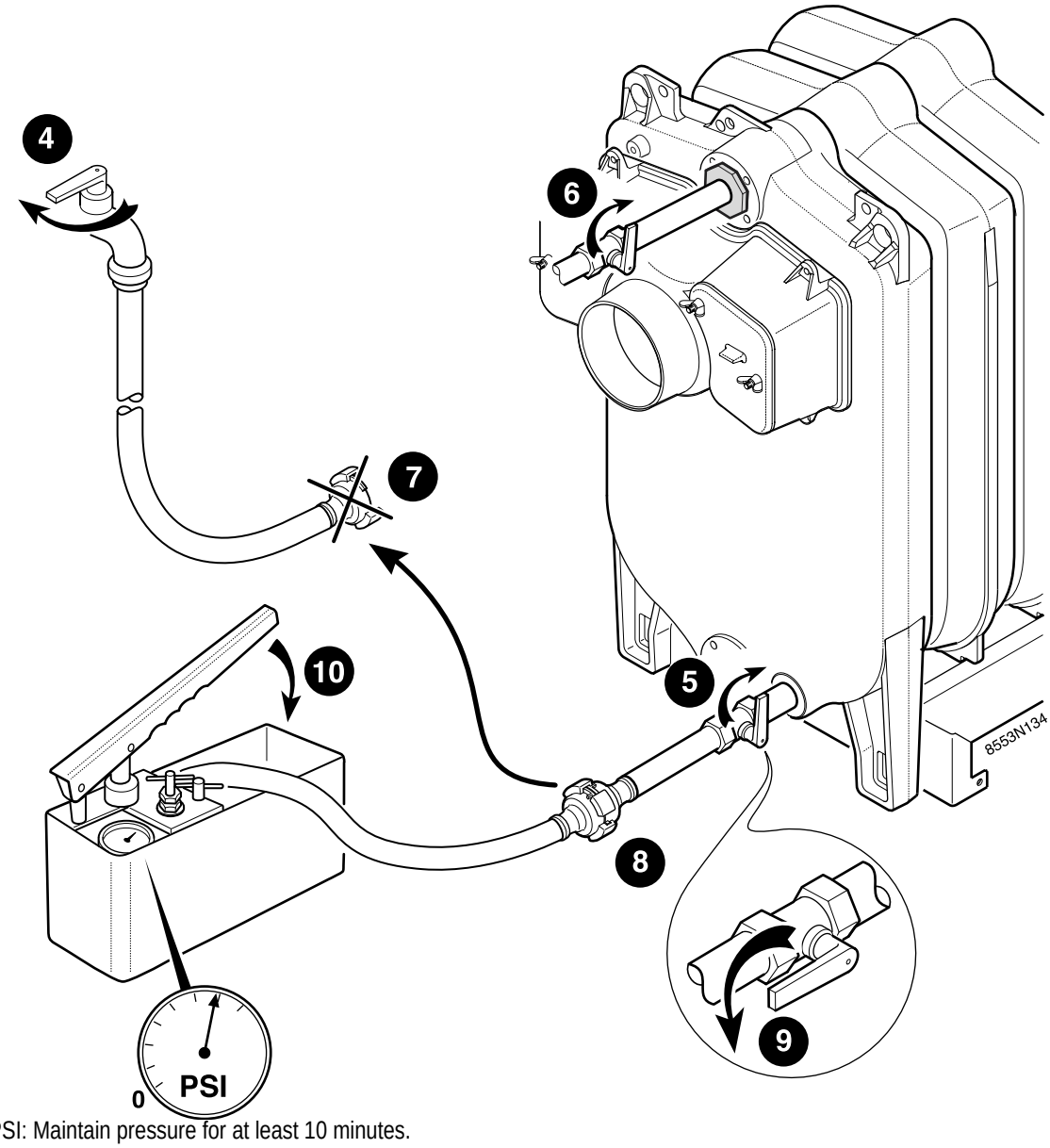


USA: 108 PSI: Maintain pressure for at least 10 minutes.

Canada: 81* PSI: Maintain pressure for at least 30 minutes.

*: 59 PSI minimum in Alberta.

Any drop in pressure indicates a leakage in the boiler body.

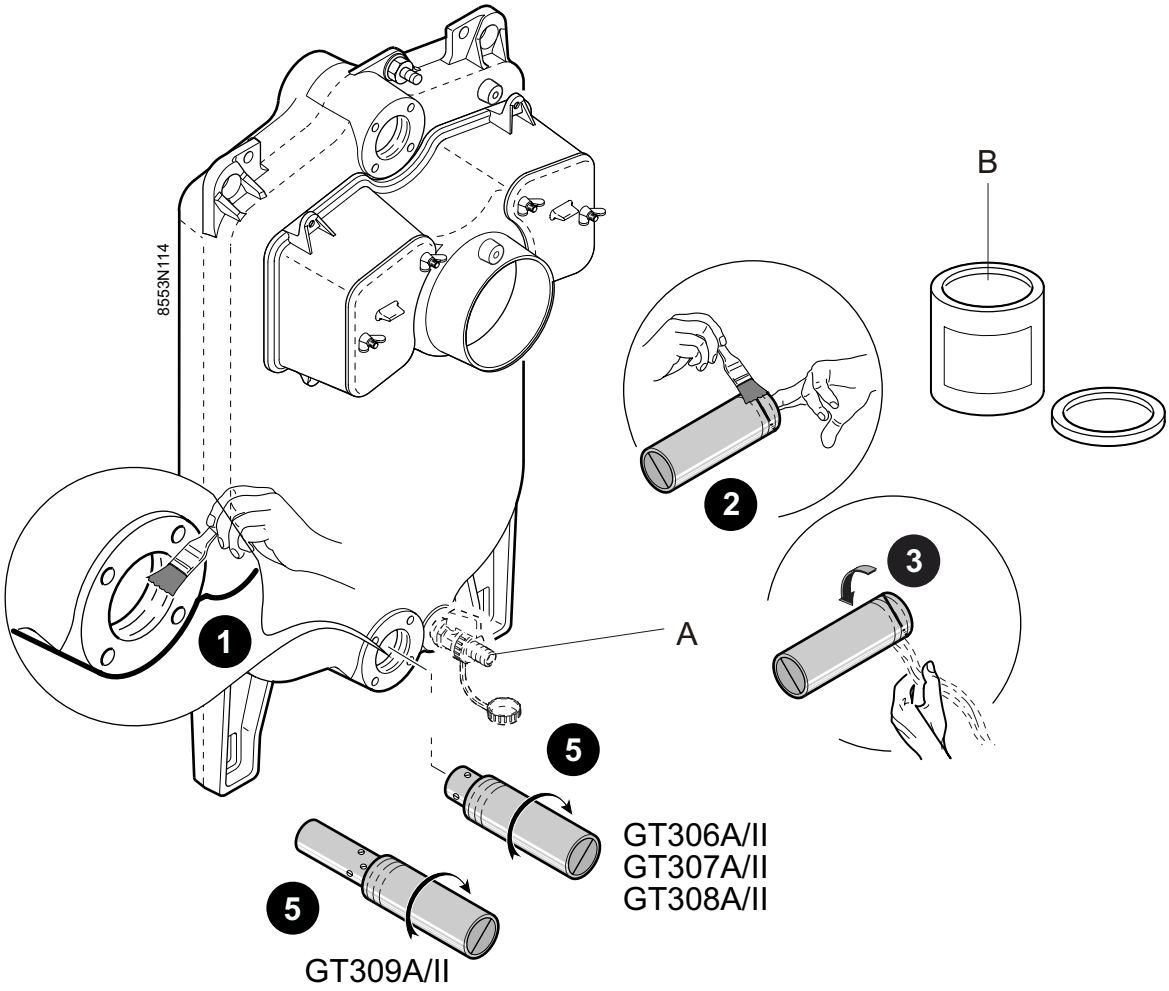


**A.** Drain tap (not supplied)

**B.** Tightness sealant (not supplied)

## 29

**USA: FD182 - FD183 - FD184 - FD185 - FD186 - FD 187**

**Canada: FD1 - FD2 - FD3 - FD4 - FD5 - FD6**

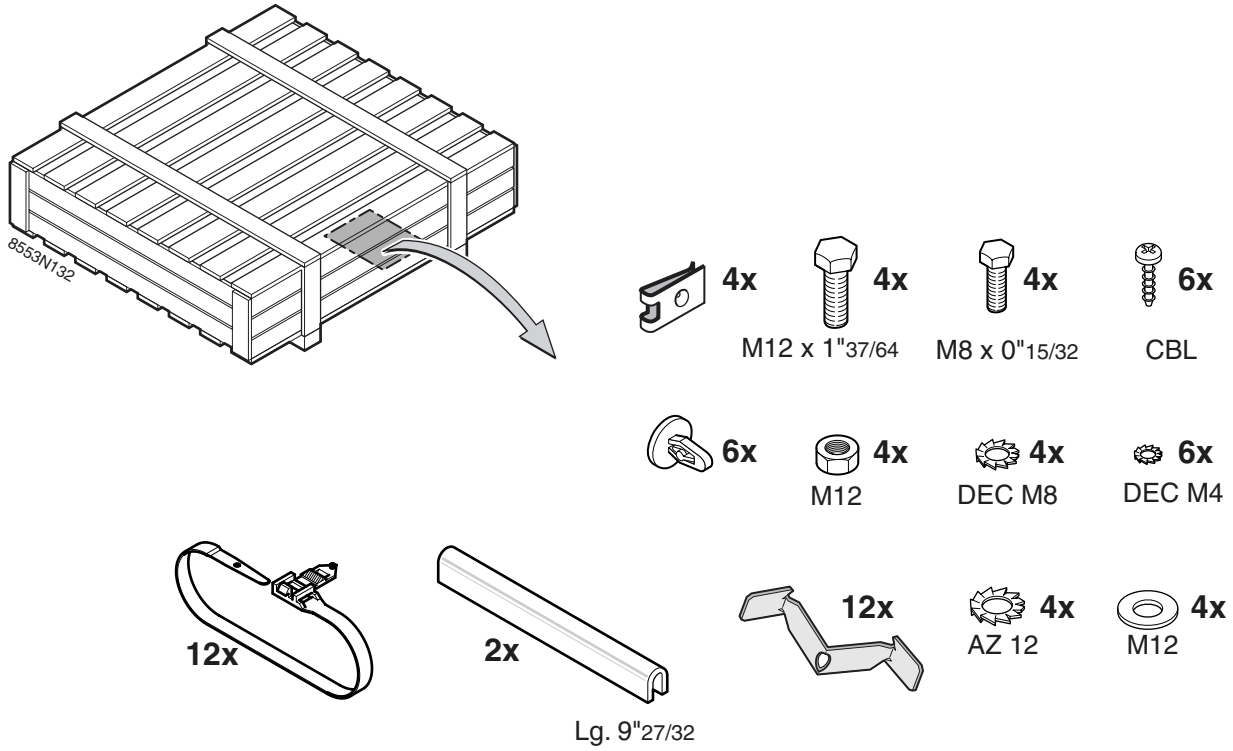


## 30 4-5-6-7 section boilers

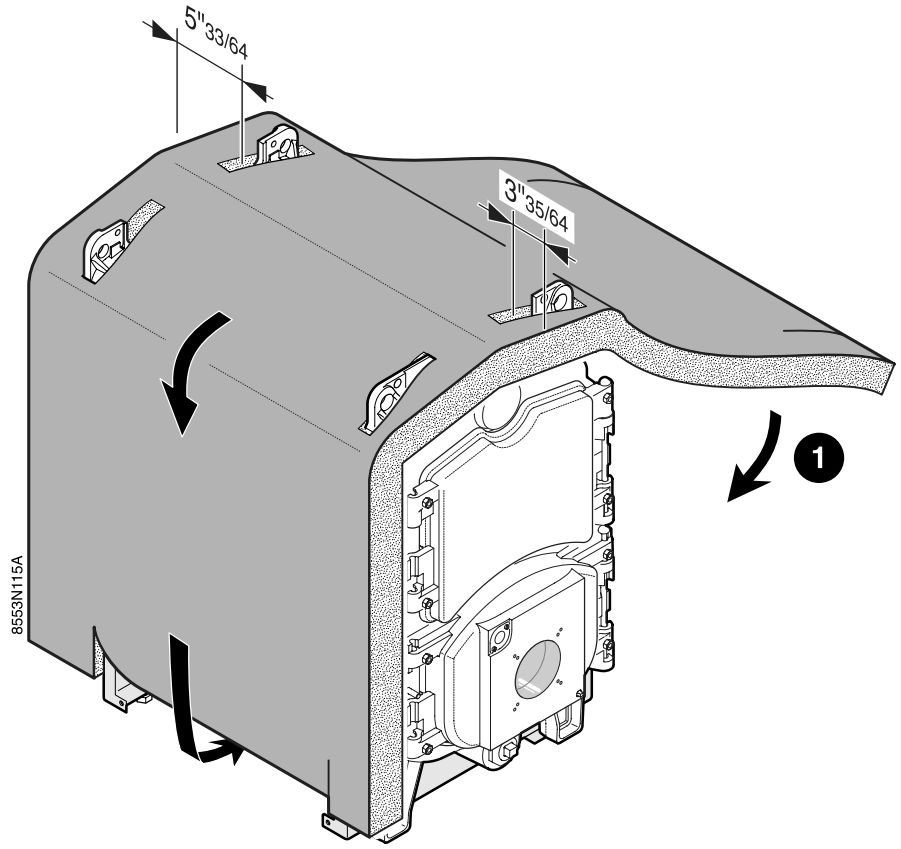

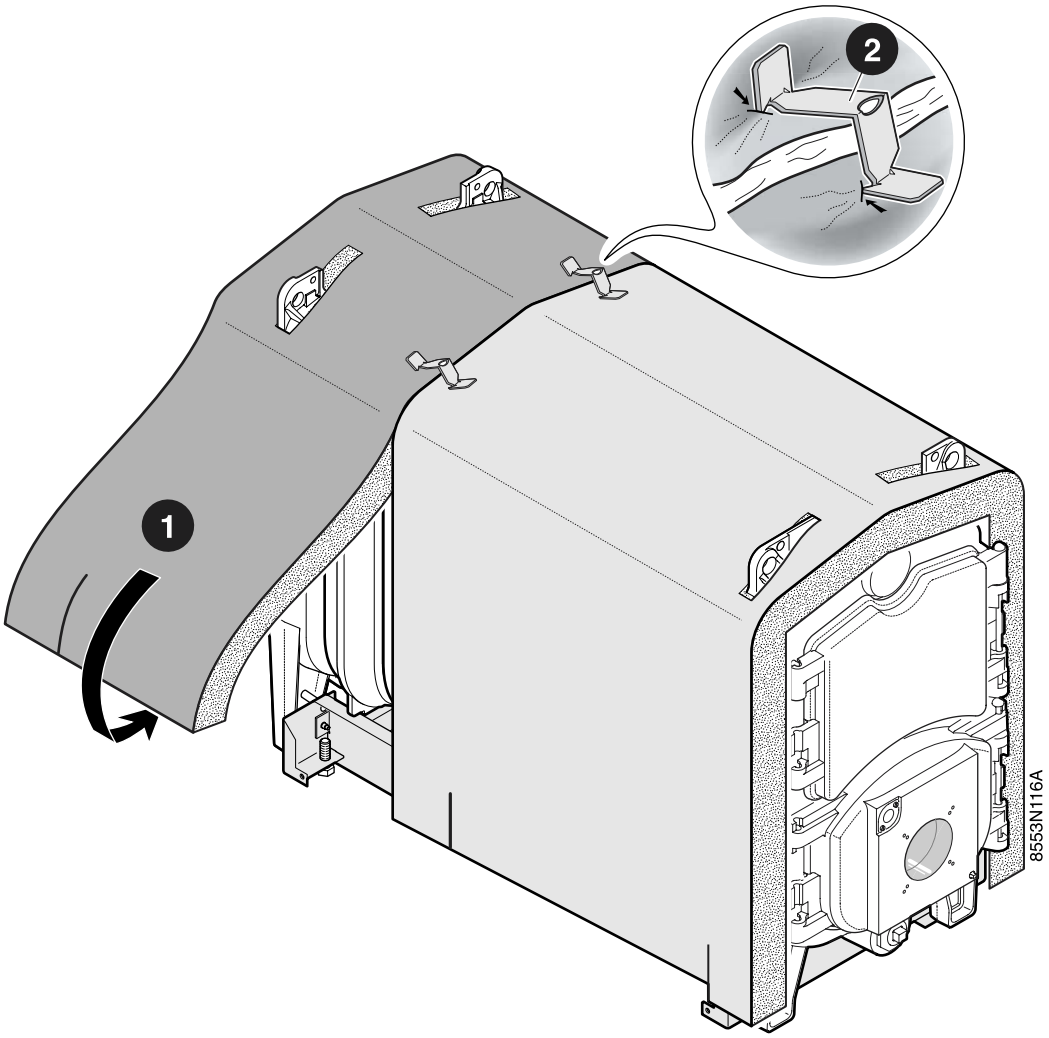
2
1
8553N116A

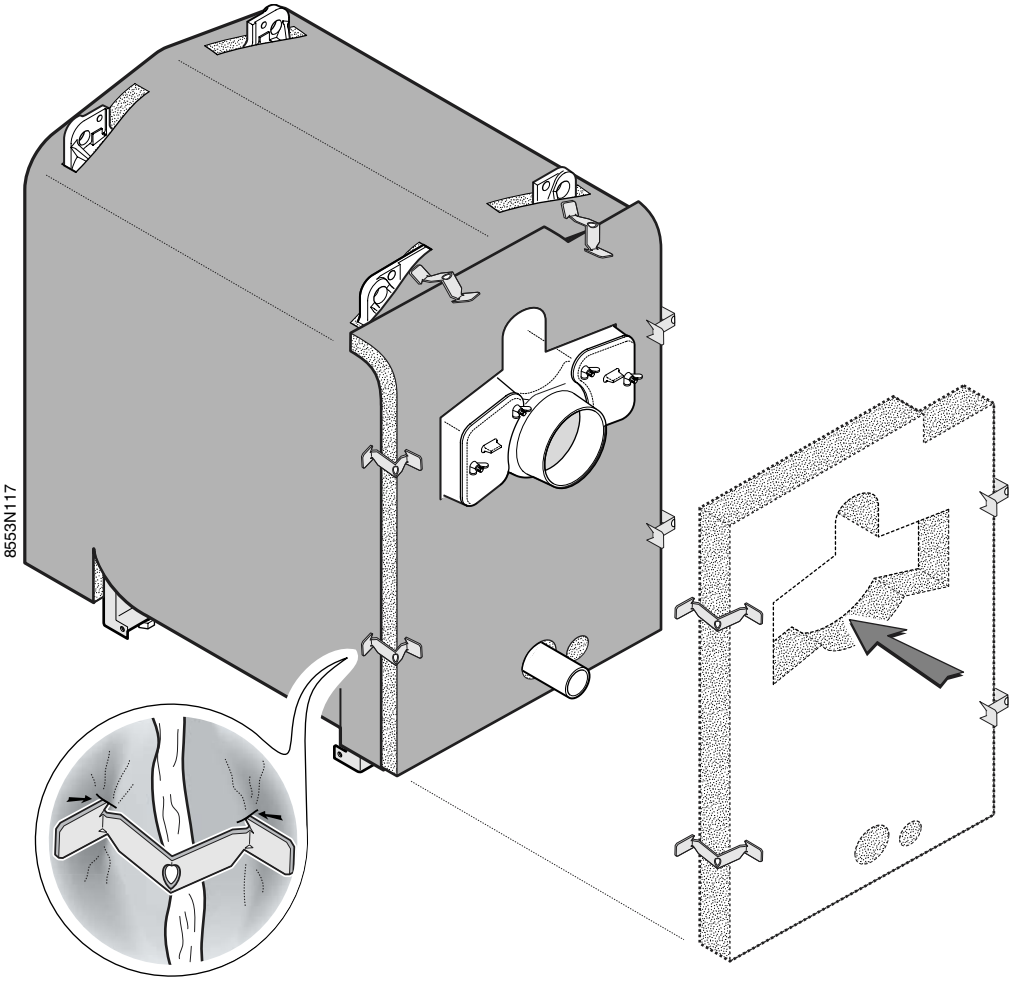
8553N117

## 33

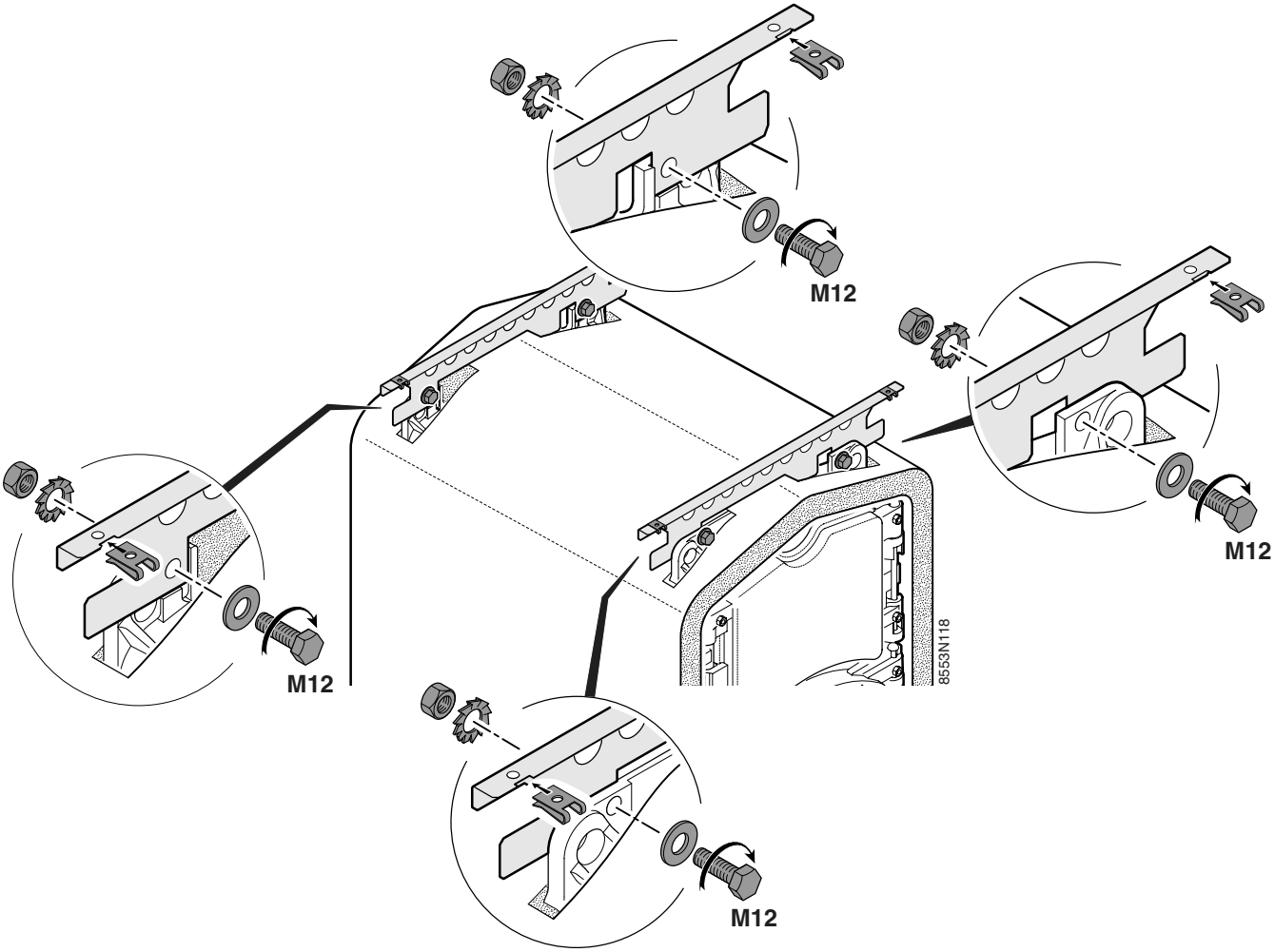


## 34

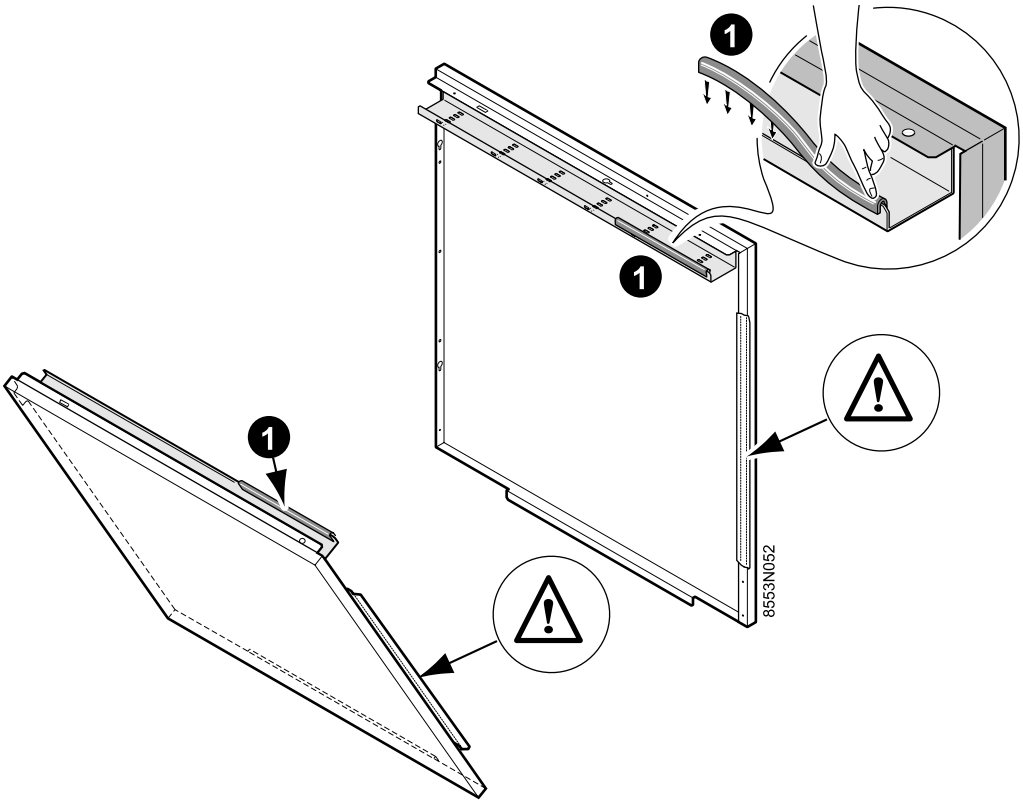

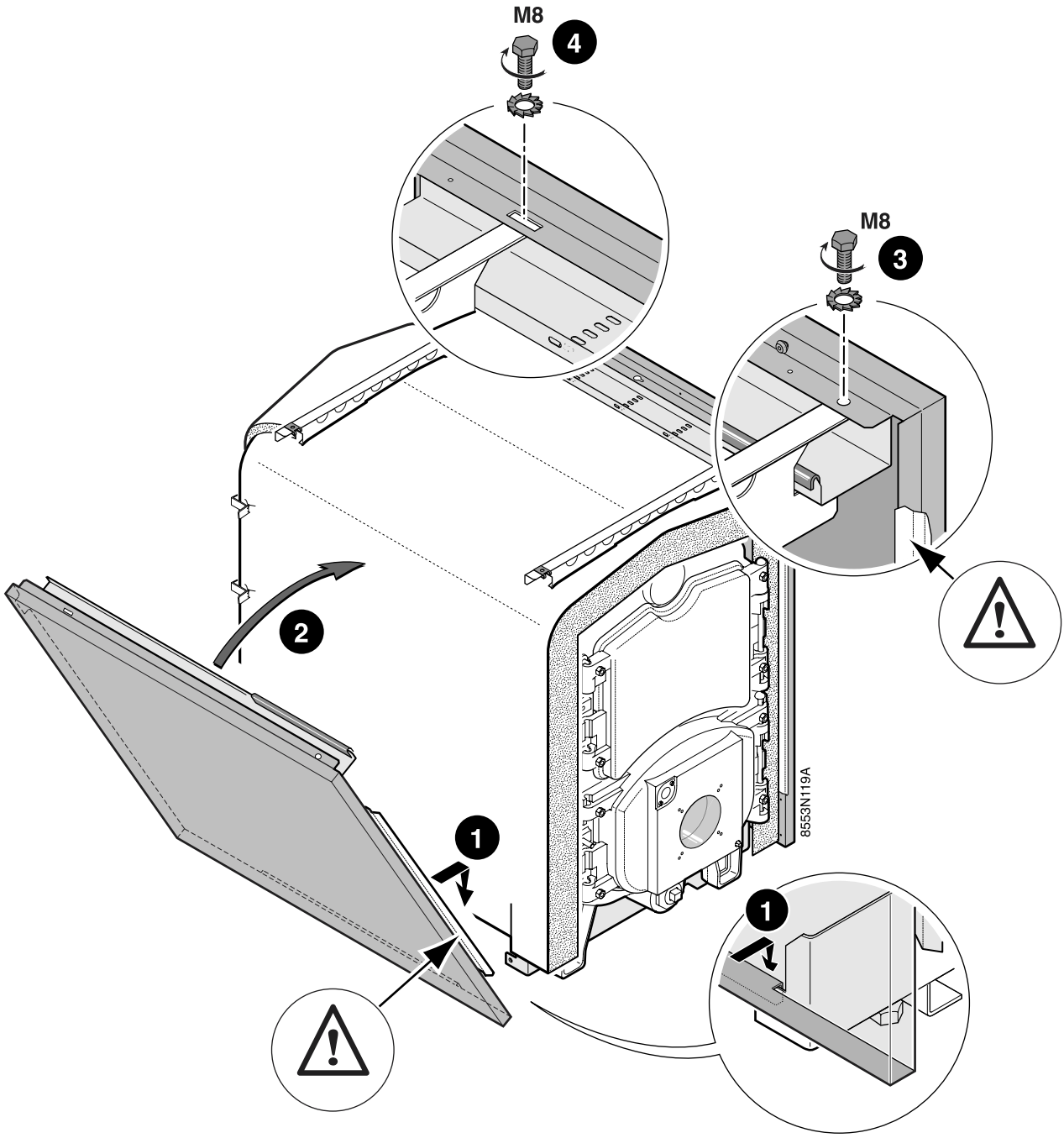
M8
4
M8
3
2
1
1
8553N119A

## 36

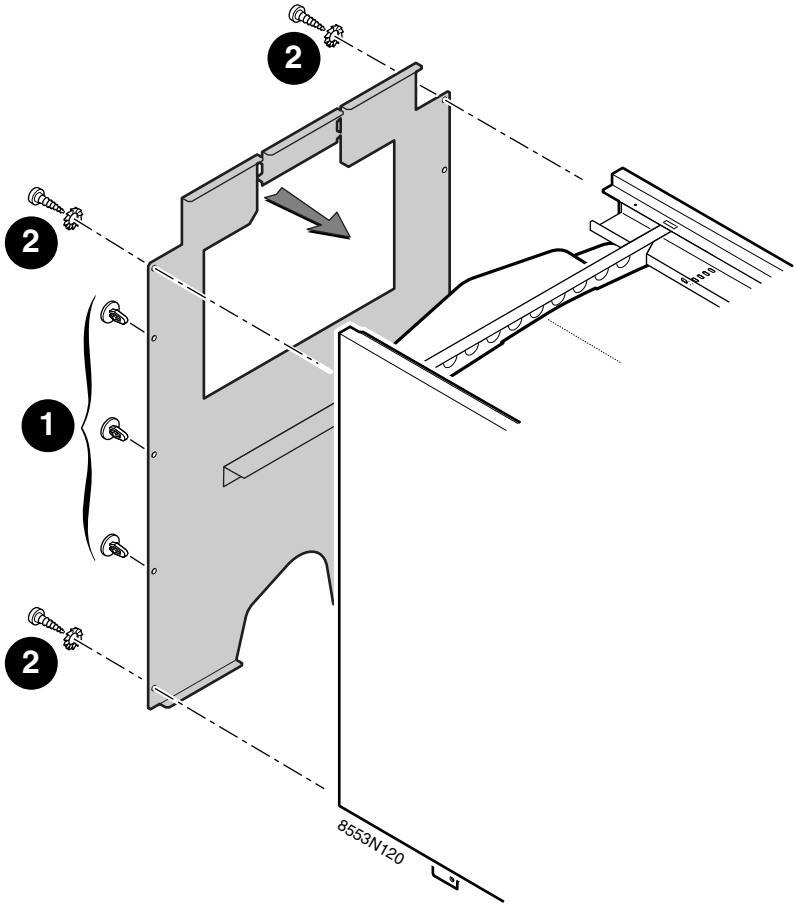


## 37

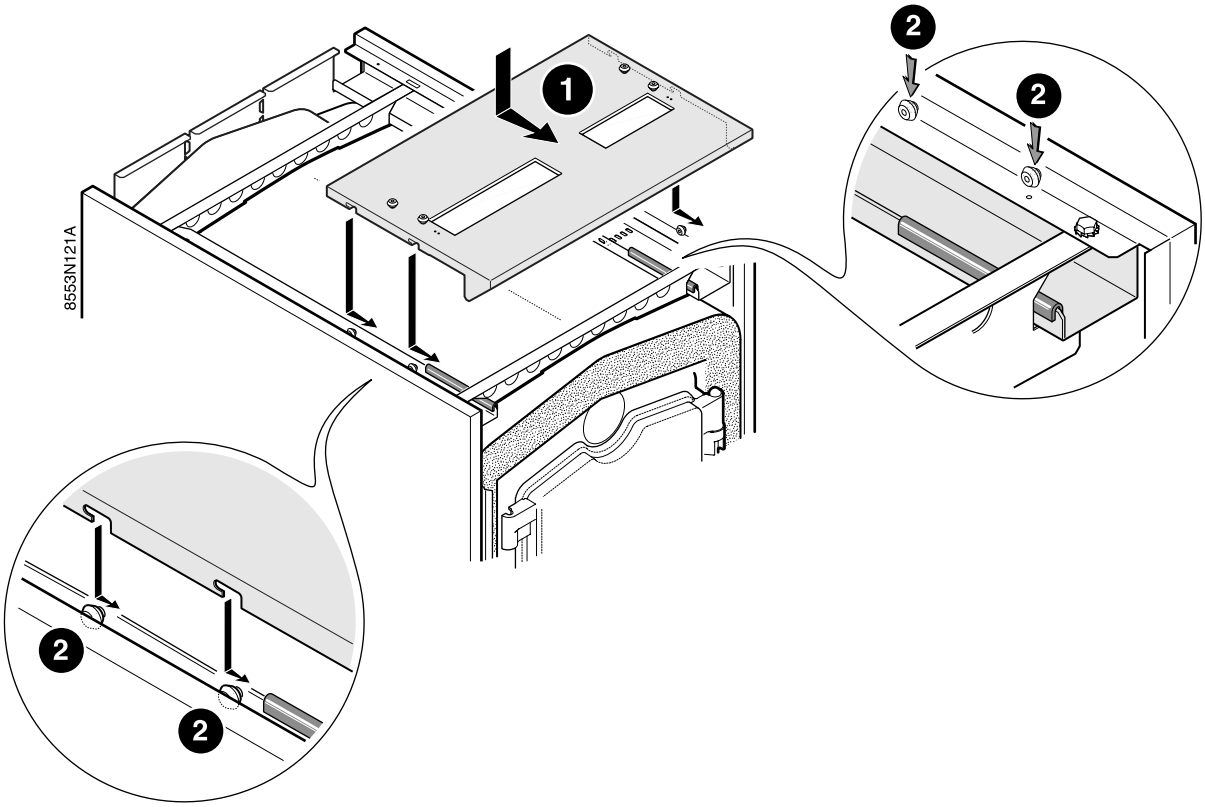

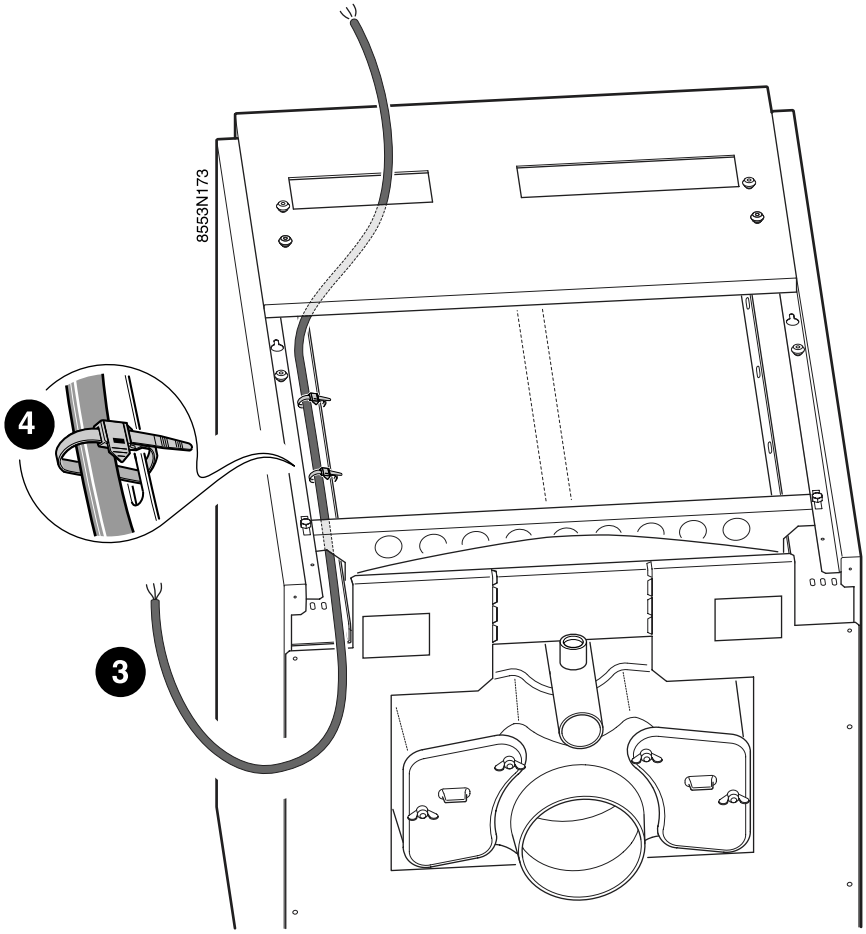


❸ **120 V - 60 Hz**

## 39 Control panel assembly

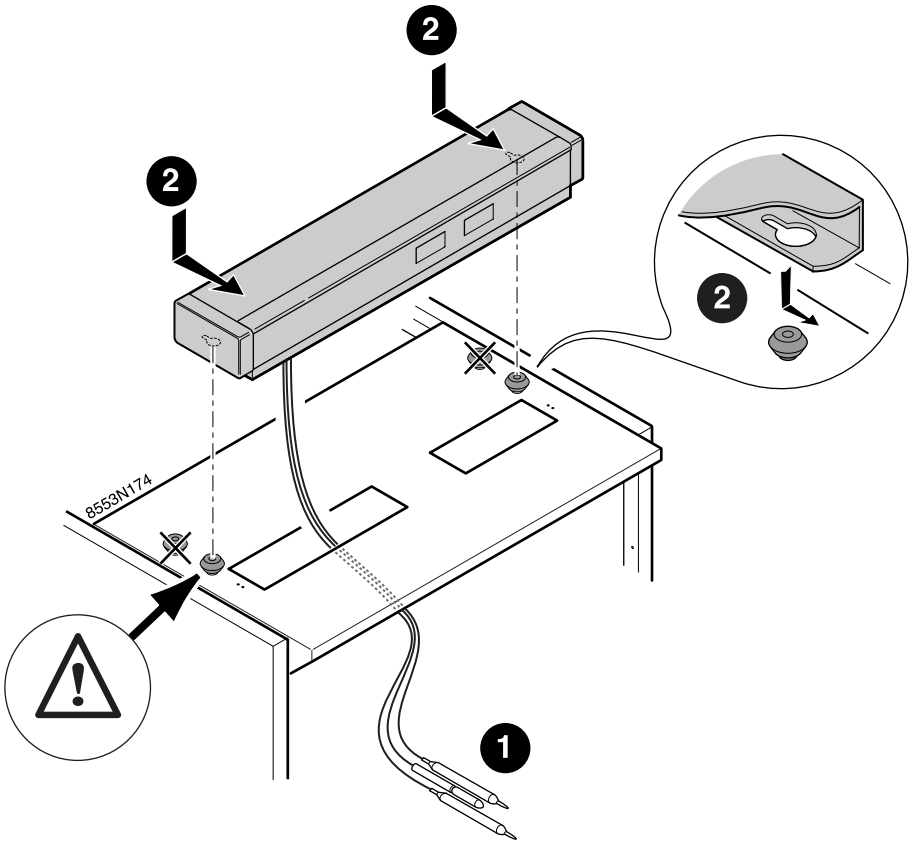


## 40

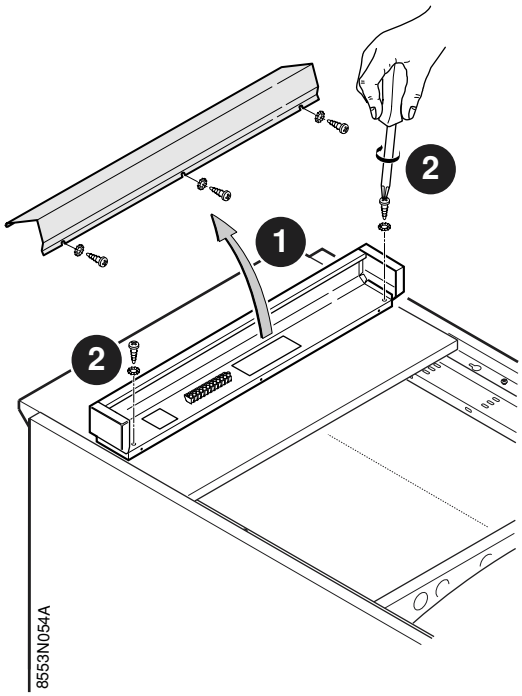

## 41

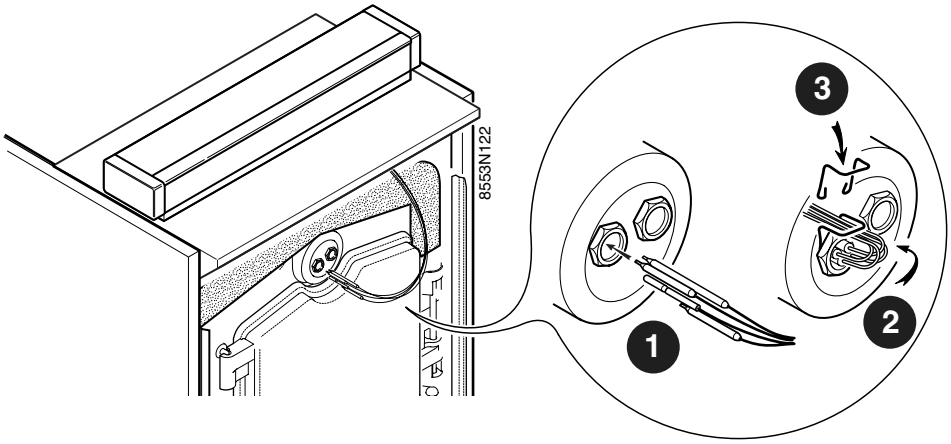


Carefully unwind the sensor bulbs and pass them through the opening in the front top cover. Insert them into the one well and secure them with the spring. The extra well is for auxiliary high temperature limit with manual reset.

## 42

Make the electrical connections to the terminal strip provided inside the control panel. Close the control panel (2 self-tapping screws + lockwashers).

## 43

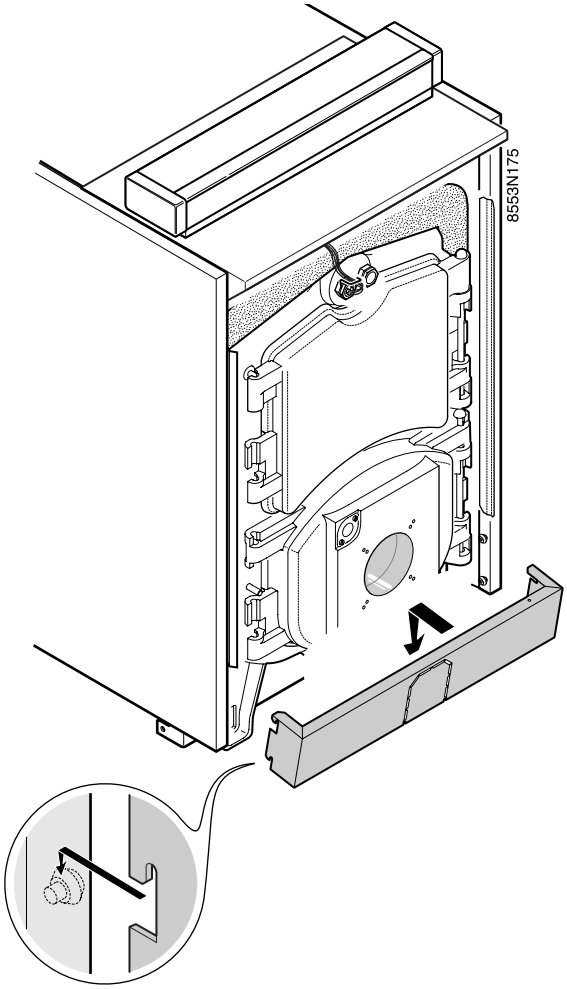

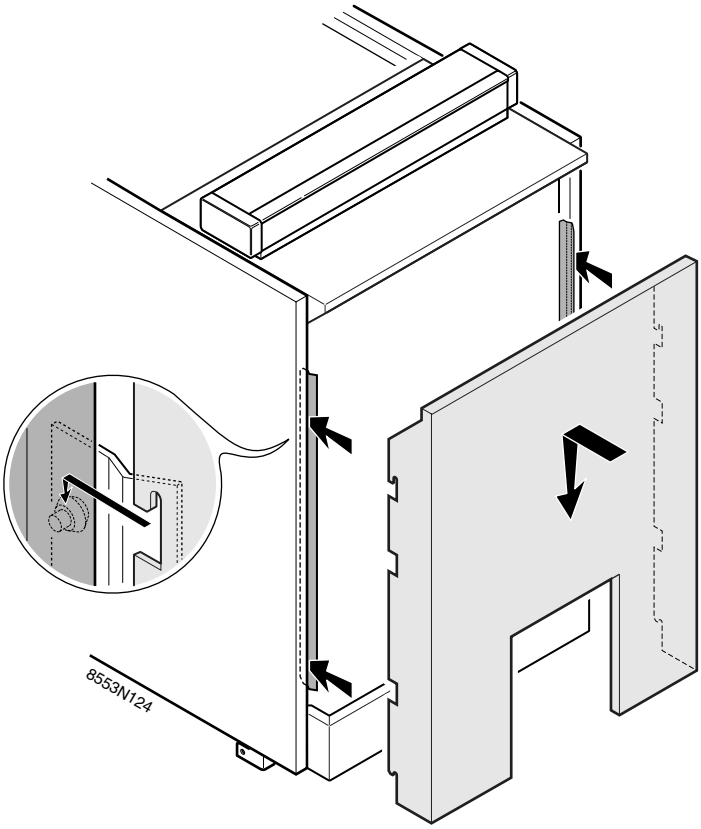
8553N124

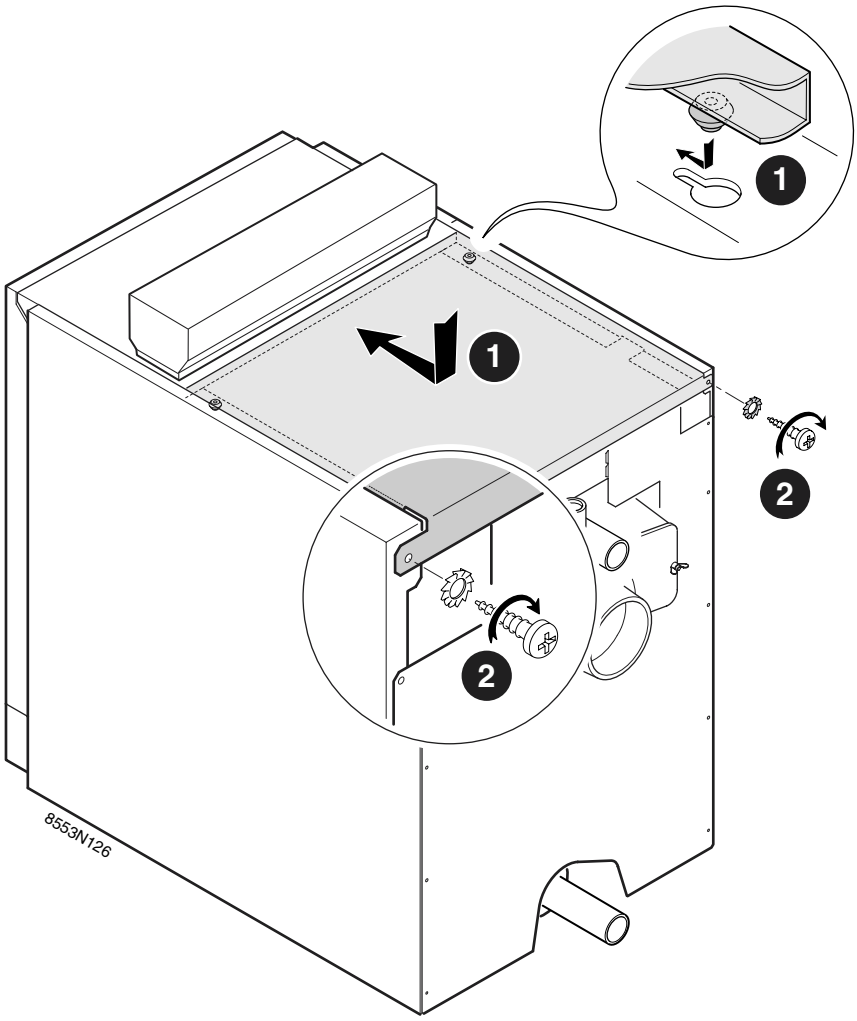
1
1
2
2
8553N126

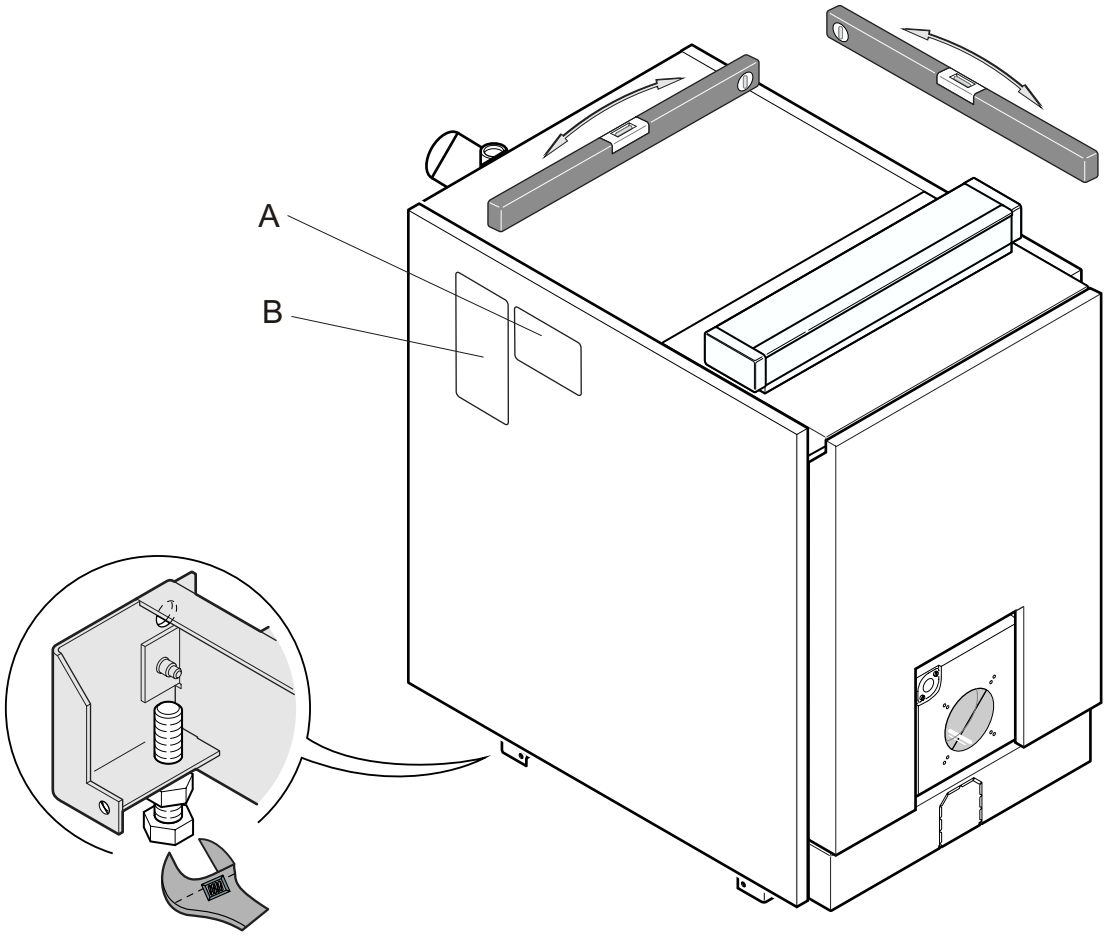


**A**: Stick warning label

**B**: Stick data plate

The Manufacturer:

De Dietrich BOILERS

Bp 30 – 57, RUE DE LA Gare
F – 67580 MERTZWILLER
Tel: +33/3/88/80/27/00 – Fax: +33/3 88 80 27 99
Ni IRC : 347 555 559 RCS STRASBOURG
www.dedietrich-thermique.com

DDR AMERICAS INC.

**In Canada:**
1090 Fountain St., Unit #10
Cambridge, Ontario, N3E 1A3 - CANADA
Tel: 519.650.0420 Fax: 519.650.1709

**In USA or South America:**
1054 North DuPage Avenue
Lombard, Illinois, USA 60148
Tel: 630.953.2374 Fax: 630.953.2376

Toll Free 1.800.943.6275
www.dedietrichboilers.com